NO.	DATE	REVISION

STATE	PROJECT DESIGNATION	YEAR	SHEET NO.	TOTAL SHEETS
ALASKA	19-310-110	2020	A1	A19

CITY OF VALDEZ

PAVEMENT MANAGEMENT, PHASE 1

ROBE RIVER SUBDIVISION
PROJECT NO. 19-310-110

GRADING, DRAINAGE, PAVING, SIGNING, AND STRIPING

INDEX

SHEET NO.	DESCRIPTION
A1	TITLE SHEET
A2	SHEET LAYOUT, INDEX, AND GENERAL NOTES
A3	LEGEND AND ABBREVIATIONS
A4-A19	SURVEY CONTROL SHEETS
B1	TYPICAL SECTIONS
B2	DRIVEWAY DETAILS
B3	DRIVEWAY REFERENCE TABLES
C1	ESTIMATE OF QUANTITIES
D1-D2	SUMMARY TABLES
E1	DETAILS
F1-F35	PLANS AND PROFILES
G1-G4	SITE GRADING
J1-J4	TRAFFIC CONTROL PLAN
Q1-Q4	ESCP

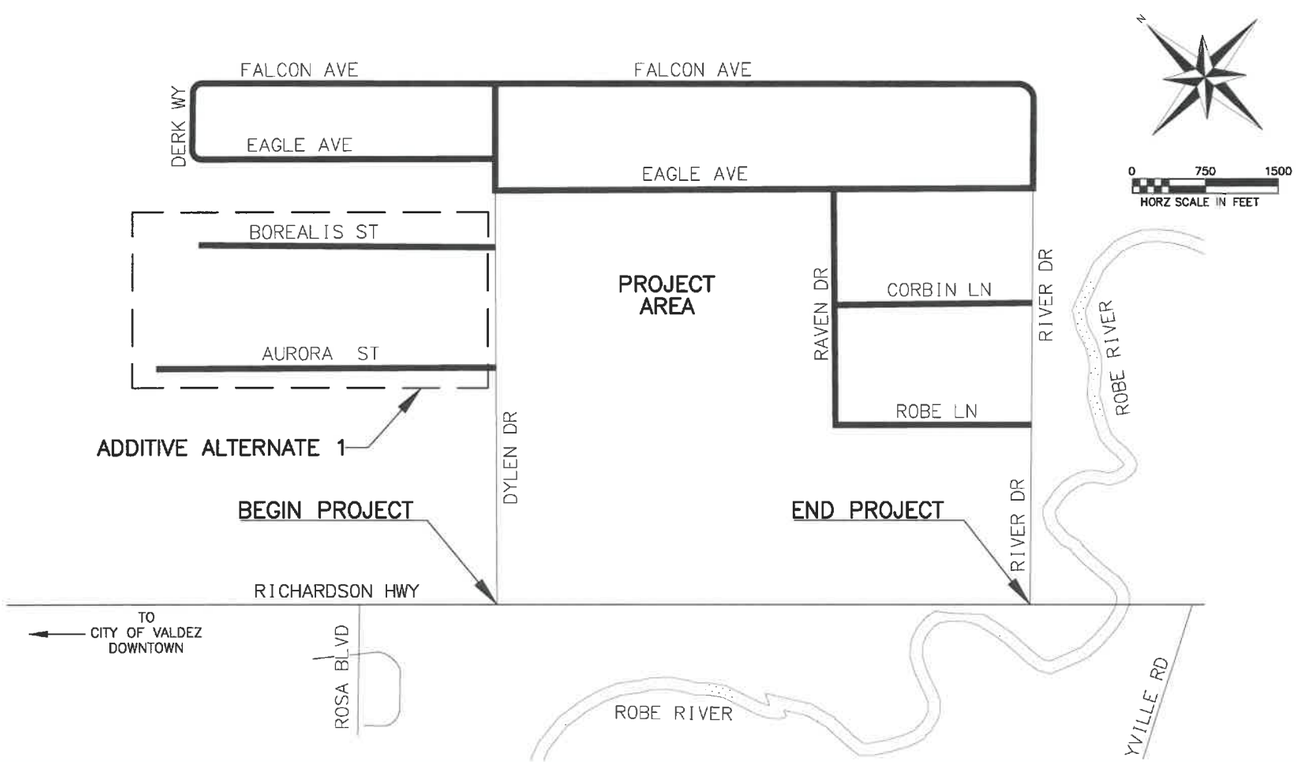

100% PS&E
APRIL 2020

KINNEY ENGINEERING, LLC

PLANS DEVELOPED BY:
KINNEY ENGINEERING, LLC
3909 Arctic Blvd, Suite 400
Anchorage, Alaska 99503
(907) 346-2373
CERT. OF AUTH. NO. AECL 1102

DRAFTED -- CHECKED -- DESIGNED -- LAYOUT A1 DATE/TIME 4/17/2020 10:12 AM
FILE Z:\PROJECTS\00581 VALDEZ DESIGN SERVICES\DWGS\C-RR\SHEETS\581-RR_A1_TITLE.DWG

NO.	DATE	REVISION	STATE	PROJECT DESIGNATION	YEAR	SHEET NO.	TOTAL SHEETS
			ALASKA	19-310-110	2020	A2	A19

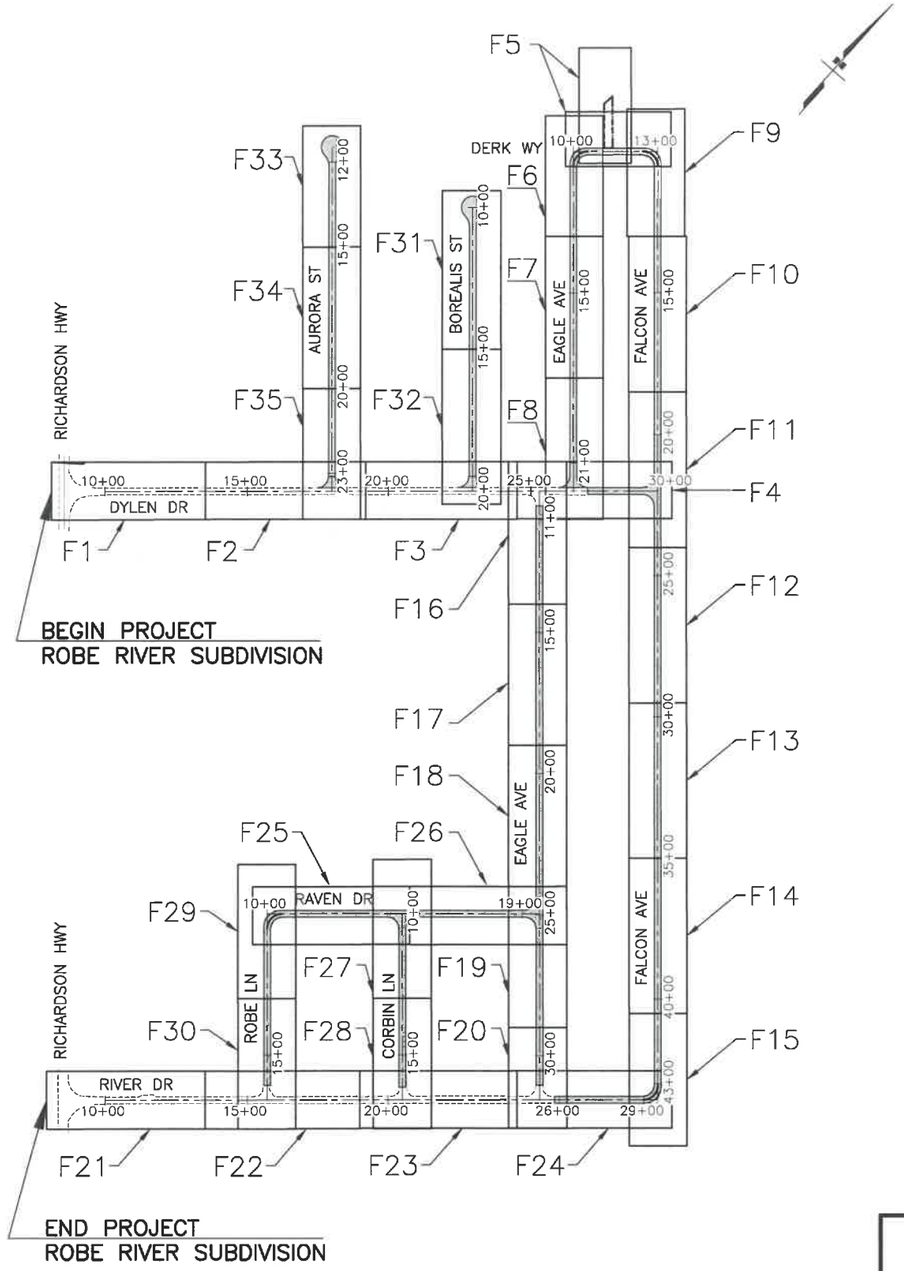

SHEET LAYOUT

GENERAL NOTES:

1. CONTRACTOR SHALL COMPLETE CONSTRUCTION IN ACCORDANCE WITH THE PROJECT SPECIAL PROVISONS, STANDARD MODIFICATIONS, PLANS, STANDARD SPECIFICATIONS, AND STANDARD DETAILS.
2. THE CONTRACTOR SHALL OBTAIN ALL NECESSARY LOCAL, STATE, AND FEDERAL PERMITS PRIOR TO BEGINNING CONSTRUCTION. THE PERMITS SHALL BE MAINTAINED AT THE JOB SITE.
3. CONTRACTOR SHALL MAINTAIN "REDLINE" RECORD DRAWINGS ON A CLEAN SET OF CONSTRUCTION DRAWINGS. THE CONTRACTOR SHALL MAINTAIN THE "REDLINES" CURRENT ON A DAILY BASIS WHICH SHALL BE AVAILABLE TO THE ENGINEER FOR INSPECTION ON THE JOB SITE. CONTRACTOR SHALL RECORD SURVEY NOTES AND SUBMIT DAILY TO THE ENGINEER. CONTRACTOR SHALL RECORD SURVEY NOTES FOR SUBMITTAL WITH RECORD DRAWINGS, INCLUDING HORIZONTAL AND VERTICAL LOCATIONS OF ALL UTILITIES ENCOUNTERED IN THE FIELD. CONTRACTOR SHALL RECORD ALL DEVIATIONS FROM THE PLANS.
4. CONSTRUCTION OPERATIONS REQUIRED FOR THIS PROJECT SHALL REMAIN WITHIN EXISTING CITY OF VALDEZ RIGHTS-OF-WAY AND EASEMENTS, UNLESS OTHERWISE APPROVED IN WRITING BY THE ENGINEER AND THE AFFECTED PROPERTY OWNER.
5. LOCATIONS DEPICTED FOR THE UTILITIES AND OTHER EXISTING FEATURES ARE APPROXIMATE. SOME UTILITIES HAVE BEEN LOCATED FROM RECORD DRAWINGS AND UTILITY COMPANY LOCATES. CONTRACTOR SHALL LOCATE AND VERIFY ALL UTILITIES PRIOR TO CONSTRUCTION. THE CONTRACTOR SHALL BE SOLELY RESPONSIBLE FOR ALL DAMAGES TO UTILITIES THAT ARE THE RESULT OF FAILURE TO OBTAIN FIELD LOCATES BEFORE PERFORMING WORK THAT RESULTED IN DAMAGE.
6. UNDERGROUND ELECTRICAL AND TELECOMMUNICATION LINES OCCUR WITHIN THE PROJECT AREA; CONTRACTOR SHALL COORDINATE WORK ACCORDINGLY. ALL WORK IN CLOSE PROXIMITY TO EXISTING UNDERGROUND LINES SHALL COMPLY WITH APPLICABLE FEDERAL, STATE, AND LOCAL STATUTES, CODES AND GUIDELINES, AND THE ELECTRICAL FACILITY CLEARANCE REQUIREMENTS OF THE GOVERNING UTILITY. CONTRACTOR SHALL HAND DIG WITHIN TWO FEET OF BURIED ELECTRICAL CABLE.
7. CONTRACTOR SHALL SAWCUT EXISTING PAVEMENT (ROADS, PARKING AREAS, DRIVEWAYS, ETC.,) TO A LINE 2 FEET BEYOND THE PROPOSED IMPROVEMENTS, DURING THE INITIAL EXCAVATION OPERATIONS. IF EXISTING PAVEMENT HAS BEEN LIFTED, IF EDGE DOES NOT OCCUR IN UNDISTURBED MATERIAL, OR IF EDGE IS LOCATED WITHIN A TRAVEL LANE, FURTHER REMOVAL MAY BE REQUIRED, AS DIRECTED BY THE ENGINEER, TO PROVIDE A PROPER TRANSITION BETWEEN NEW AND EXISTING PAVEMENT. SAW CUTTING OF EXISTING PAVEMENT IS INCIDENTAL TO THE BID ITEM "REMOVE PAVEMENT", AND NO SEPARATE PAYMENT SHALL BE MADE.
8. CONTRACTOR SHALL APPLY TACK COAT TO THE SAW CUT ASPHALT FACE PRIOR TO PAVING. CONTRACTOR SHALL SAWCUT CURB & GUTTER AND SIDEWALK AT THE NEAREST JOINT AT OR BEYOND REMOVAL LIMITS OR AS DIRECTED BY THE ENGINEER. TACK COAT IS INCIDENTAL TO THE RESPECTIVE BID ITEM.
9. CONTRACTOR SHALL MAINTAIN STOP SIGNS AND STREET NAME SIGNS OPERATIONAL IN THE PROJECT AREA DURING CONSTRUCTION. CONSTRUCTION TRAFFIC CONTROL WILL BE REQUIRED FOR THE PROJECT. SEE SECTION 10.04, SCOPE OF WORK, AND SECTION 70.15, TRAFFIC MAINTENANCE, FOR TRAFFIC CONTROL REQUIREMENTS.
10. LIMITS OF EXCAVATION AND BACKFILL SHALL BE AS SHOWN ON THE PLANS OR AS DIRECTED BY THE ENGINEER.
11. CONTRACTOR SHALL REMOVE ORGANIC MATERIAL FROM THE SUBGRADE TO A DEPTH TO BE DETERMINED BY THE ENGINEER. CONTRACTOR SHALL NOT PLACE OR SHALL NOT OTHERWISE UTILIZE ORGANIC MATERIAL OR OTHER DELETERIOUS MATERIAL FOR BACKFILL, UNLESS OTHERWISE DIRECTED BY THE ENGINEER.
12. WORK AND MATERIALS REQUIRED FOR REMOVING LITTER OR DEBRIS THAT EXIST WITHIN THE PROJECT LIMITS ARE INCIDENTAL TO THE PROJECT AND NO SEPARATE PAYMENT SHALL BE MADE.
13. CONTRACTOR SHALL REPLACE ALL DISTURBED PROPERTY CORNERS. PAYMENT FOR REPLACING DISTURBED PROPERTY CORNERS IS INCIDENTAL TO THE CONTRACT AND NO SEPARATE PAYMENT SHALL BE MADE.
14. CONTRACTOR SHALL TOPSOIL AND SEED ALL DISTURBED AREAS WHERE OTHER STABILIZED SURFACE IS NOT SPECIFIED. TOPSOIL AND SEED IS SUBSIDIARY TO OTHER ITEMS OF WORK, EXCEPT WHERE NOTED OTHERWISE ON THE PLANS.
15. CONTRACTOR SHALL RESTORE DISTURBED PROPERTY TO PRECONSTRUCTION CONDITION(S), UNLESS OTHERWISE DIRECTED BY THE ENGINEER. PAYMENT FOR RESTORING DISTURBED PROPERTY IS INCIDENTAL TO THE CONTRACT AND NO SEPARATE PAYMENT SHALL BE MADE.
16. IF CONTAMINATED SOIL, GROUNDWATER, OR FREE-PRODUCT ARE ENCOUNTERED, THE CONSTRUCTION CONTRACTOR SHALL IMMEDIATELY CONTACT THE ENGINEER WHO WILL IMMEDIATELY CONTACT THE DEC PREVENTION AND EMERGENCY RESPONSE (PERP) OFFICE STAFF AT (907) 269-3063 / FAX (907)269-7648 IN ACCORDANCE WITH SPILL REPORTING REQUIREMENTS UNDER 18 AAC 75.300, AND COORDINATE MANAGEMENT OF ALL CONTAMINATED MEDIA WITH EMERGENCY RESPONSE PERSONNEL.

CALL BEFORE YOU DIG!

CONTRACTOR SHALL CALL A MINIMUM OF 3 DAYS IN ADVANCE OF CONSTRUCTION

ALASKA DIGLINE....907-278-3121 OR 800-478-3121

CALL OR GO TO WWW.AKONECALL.COM/STATEWIDE.HTM FOR MEMBER LIST OF WHO WILL BE NOTIFIED

CONTACT THE FOLLOWING UTILITIES DIRECTLY:
City of Valdez Water/Waste Water 835-4888
Copper Valley Electric Association 835-4301
Copper Valley Telephone Cooperative 835-2231
GCI 220-6097

CITY OF VALDEZ, ALASKA · OPPORTUNITIES IN EVERY SEASON

STATE OF ALASKA · 49TH · JOSHUA E. CROSS · CE 11222 · REGISTERED PROFESSIONAL ENGINEER
4/17/20

PLANS DEVELOPED BY:
KINNEY ENGINEERING, LLC
3909 ARCTIC BLVD, SUITE 400
ANCHORAGE, AK 99503
(907) 348-2373
KINNEY ENGINEERING, LLC
CERT. OF AUTH. NO. AECL 1102

CITY OF VALDEZ
PAVEMENT MANAGEMENT PHASE 1
ROBE RIVER SUBDIVISION

SHEET LAYOUT, INDEX, AND GENERAL NOTES

FILE Z:\PROJECTS\00581 VALDEZ DESIGN SERVICES\DWGS\C-RR\SHEETS\381-RR_A2_INDEX.DWG
DATE/TIME 4/17/2020 10:13 AM | LAYOUT A2 | DESIGNED -- | CHECKED -- | DRAFTED --

NO.	DATE	REVISION

STATE	PROJECT DESIGNATION	YEAR	SHEET NO.	TOTAL SHEETS
ALASKA	19-310-110	2020	A3	A19

UTILITIES

	EXISTING	PROPOSED
PIPELINES:		
STORM DRAIN STRUCTURE AND PIPE NUMBERS, APPLICABLE IF SHOWN		S1-1, S1-2, P1-1, P1-2
STORM DRAIN	SD	SD
MANHOLE STORM DRAIN		SD
CURB INLET CATCH BASIN		
FIELD INLET CATCH BASIN		FI
PIPE CULVERT w/ END SECTION		
SANITARY SEWER	SS	SS
MANHOLE SANITARY SEWER	SS	SS
SEPTIC VENTS		
WATER	W	W
FIRE HYDRANT		
VALVE OR RISER		
ELECTRIC (OVERHEAD)	OE	
ELECTRIC (UNDERGROUND)	UE	UE
UTILITY POLE		
UTILITY POLE WITH LUMINAIRE		
GUY WIRE		
ELECTRICAL TRANSFORMER	E	E
TELEPHONE (UNDERGROUND)	UT	
TELEPHONE PEDESTAL		
FIBER OPTIC	FO	
FIBER OPTIC MANHOLE		
CABLE TV (UNDERGROUND)	CTV	
CABLE TV PEDESTAL		

UTILITIES

	EXISTING	PROPOSED
ELECTROLIER		
ILLUMINATION		UE
TYPE IA JUNCTION BOX		
TYPE II JUNCTION BOX		
LOAD CENTER		

RIGHT OF WAY

	ROW
RIGHT-OF-WAY	
PROPERTY LINE	
EASEMENT	
TEMPORARY CONSTRUCTION EASEMENT/PERMIT	
PROJECT CENTERLINE	27+00

TOPOGRAPHY

CONTOURS - MAJOR	515
CONTOURS - MINOR	

MISCELLANEOUS

TRAFFIC SIGN	
GEOTECHNICAL BORE LOCATION	B-X

ROADWAY

	EXISTING	PROPOSED
REMOVAL OF EXISTING PAVEMENT		
LIMIT OF CUT SLOPE		
LIMIT OF FILL SLOPE		
EDGE OF PAVEMENT		
CONCRETE CURB		
CONCRETE CURB & GUTTER		
CONCRETE CURB CUT		
SIDEWALK		
CURB RAMPS		
PARALLEL CURB RAMP		
DETECTABLE WARNING TILES		
DRIVEWAY APPROACH		
GRAVEL EDGE		
PATH / TRAIL		
FENCE	X X	X X
DITCH		
DITCH LINING		
FLOW DIRECTION		
PAVEMENT		
SNOW LOT RAMP		

SURVEY

BRASS CAP MONUMENT	
ALUMINUM MONUMENT	
ALUMINUM CAP	
ALUMINUM CAP	CP
TEMPORARY BENCHMARK	TBM

BORE HOLE LEGEND

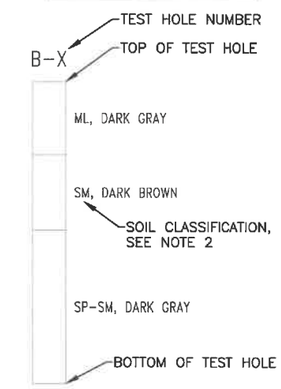

ABBREVIATIONS

AC	– ASPHALT CEMENT
ASTM	– AMERICAN SOCIETY FOR TESTING AND MATERIALS
AWWA	– AMERICAN WATER WORKS ASSOCIATION
BF	– BOARD FOOT
BRWN	– BROWN
BOP	– BEGINNING OF PROJECT/BOTTOM OF PIPE
C&G	– CURB AND GUTTER
CB	– CATCH BASIN AND CONSTRUCT CATCH BASIN
CL	– CENTERLINE
CMP	– CORRUGATED METAL PIPE
C.O.V.	– CITY OF VALDEZ
CY	– CUBIC YARD
CVEA	– COPPER VALLEY ELECTRIC ASSOCIATION
DEC	– DEPARTMENT OF ENVIRONMENTAL CONSERVATION
CVTC	– COPPER VALLEY TELEPHONE COOPERATIVE
D.I.P.	– DUCTILE IRON PIPE
DNSE	– DENSE
DOT	– DEPARTMENT OF TRANSPORTATION
DR	– DRIVE
DRK	– DARK
E	– EASTING OR EAST
EA	– EACH
ELEV	– ELEVATION
EOP	– END OF PROJECT/EDGE OF PAVEMENT
EX	– EXISTING
F&I	– FURNISH AND INSTALL
FT	– FOOT OR FEET
GRSC	– GALVANIZED RIGID STEEL CONDUIT
GV	– GATE VALVE
H	– HORIZONTAL
HDPE	– HIGH-DENSITY POLYETHYLENE
HMWPE	– HIGH MOLECULAR WEIGHT POLYETHYLENE
HR	– HOUR OR HOURS
I.D.	– INNER DIAMETER
I.E.	– INVERT ELEVATION
INV	– INVERT
IPS	– IRON PIPE SIZE
L	– LENGTH
LF	– LINEAR FOOT
LOC	– LIP OF CURB
LT	– LEFT
LS	– LUMP SUM
MAX	– MAXIMUM
ME	– MATCH EXISTING
MIN	– MINIMUM
MJ	– MECHANICAL JOINT
MSF	– THOUSAND SQUARE FEET
N	– NORTHING OR NORTH
NIC	– NOT IN CONTRACT
NO.	– NUMBER
N.T.S OR NTS	– NOT TO SCALE
O.S.H.A	– OCCUPATIONAL SAFETY AND HEALTH ADMINISTRATION
PC	– POINT OF CURVATURE
P.C.C.	– PORTLAND CEMENT CONCRETE
PI	– POINT OF INTERSECTION
PSI	– POUNDS PER SQUARE INCH
PT	– POINT OF TANGENCY
R	– RADIUS
RT	– RIGHT
R.O.W OR ROW	– RIGHT OF WAY
S	– SUPERELEVATION RATE OR SOUTH
SDMH	– STORM DRAIN MANHOLE
SDR	– STANDARD DIMENSION RATIO
SHLD	– SHOULDER
STA.	– STATION
SY	– SQUARE YARD
TBC	– TOP BACK OF CURB
T	– TANGENT
TYP.	– TYPICAL
V	– VERTICAL
VB	– VALVE BOX
VPI	– VERTICAL POINT OF INTERSECTION
W/	– WITH
W	– WEST

NOTES:

1. STANDARD LEGEND AND ABBREVIATIONS SHOWN. NOT ALL LEGEND ITEMS ARE PART OF THIS CONTRACT.
2. SOIL CLASSIFICATION IS BASED UPON UNIFIED SOIL CLASSIFICATION (ASTM D 2487-00), SEE GEOTECHNICAL REPORT FOR MORE INFORMATION.

PLANS DEVELOPED BY:
KINNEY ENGINEERING, LLC
3909 ARCTIC BLVD, SUITE 400
ANCHORAGE, AK 99503
(907) 346-2373
KINNEY ENGINEERING, LLC
CERT. OF AUTH. NO. AECL 1102

CITY OF VALDEZ, ALASKA
OPPORTUNITIES IN EVERY SEASON

STATE OF ALASKA
49TH
JOSHUA E. CROSS
CE 11222
REGISTERED PROFESSIONAL ENGINEER
4/17/20

CITY OF VALDEZ
PAVEMENT MANAGEMENT PHASE 1
ROBE RIVER SUBDIVISION

LEGEND AND ABBREVIATIONS

DRAFTED | CHECKED | DESIGNED | A3 | LAYOUT | DATE/TIME 4/17/2020 10:13 AM
FILE Z:\PROJECTS\00581 VALDEZ DESIGN SERVICES\DWGS\C-RR\SHEETS\581-RR_A3_LGND.DWG

NO.	DATE	REVISION

STATE	PROJECT DESIGNATION	YEAR	SHEET NO.	TOTAL SHEETS
ALASKA	19-310-110	2020	A4	A19

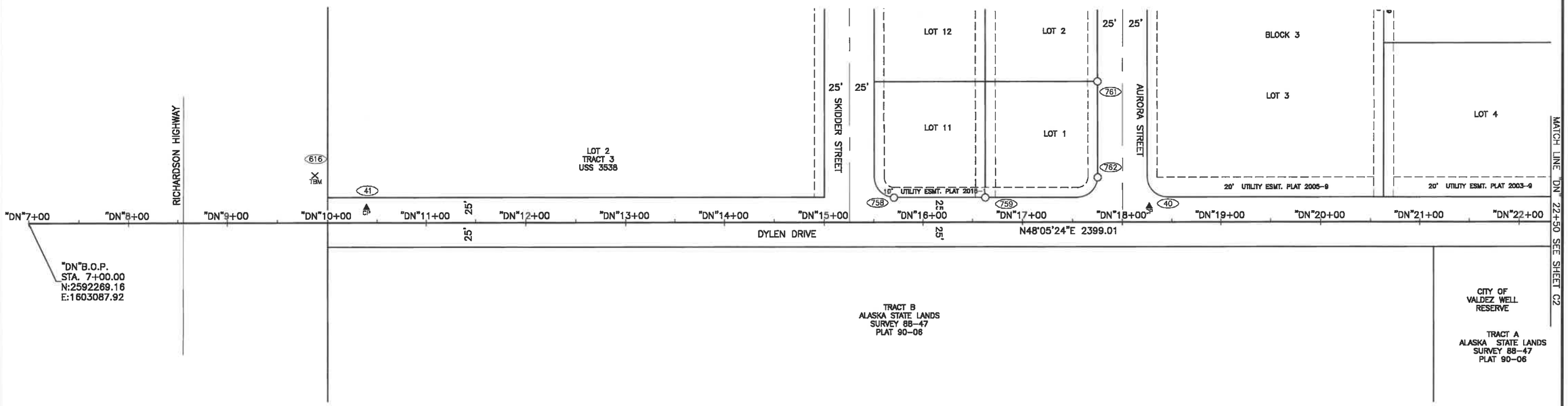

SURVEY NOTES

1. THE FIELD SURVEY WAS PERFORMED BY PROFESSIONAL AND TECHNICAL SERVICES INC.(PTS), FROM JULY 27, 2019 TO AUGUST 16, 2019. FIELD SURVEY INFORMATION FOR THIS PROJECT IS LOCATED IN PTS FIELD BOOKS 19-102, 19-103, 19-104, AND 19-105.
2. A TITLE SEARCH WAS NOT PERFORMED, EASEMENTS OF RECORD OTHER THAN THOSE SHOWN ON THE RECORDED PLATS ARE NOT SHOWN HEREON. RECORD REFERENCE INFORMATION FOR EASEMENTS IS NOT SHOWN HERON.
3. ALL DISTURBED PROPERTY CORNERS SHALL BE REPLACED BY THE CONTRACTOR IN ACCORDANCE WITH THE C.O.V. STANDARD SPECIFICATIONS, SECTION 65.02 CONSTRUCTION SURVEYING, ARTICLE 2.1 PROJECT CONTROL.
4. THE BASIS OF BEARING IS NAD83 (2011) EPOCH: 2010 ALASKA STATE PLANE ZONE 3 GRID FROM GPS OBSERVATIONS.
5. COORDINATES ARE NAD83 (2011) EPOCH: 2010 MODIFIED ALASKA STATE PLANE ZONE 3 SCALED TO GROUND FROM POINT NUMBER 19, AND EXPRESSED IN U.S. SURVEY FEET. THE BASIS OF COORDINATES IS POINT NUMBER 19 PER AN N.G.S OPUS SOLUTION.
6. TO CONVERT TO STATE PLANE COORDINATES, SCALE USING 0.999897498.
7. ELEVATIONS ARE BASED ON POINT NUMBER 19 PER N.G.S. OPUS SOLUTION, VERTICAL DATUM NAVD88 GEOID12B.

COORDINATE SCHEDULE

POINT NUMBERS	STATION	OFFSET	NORTHING	EASTING	DESCRIPTION
41	10+39.09	15.40 LT	2592507.1202	1603329.9763	SET 2" ALUMINUM CAP ON 5/8" X 30" REBAR
40	18+26.91	15.93 LT	2593033.7530	1603915.9224	SET 2" ALUMINUM CAP ON 5/8" X 30" REBAR

COORDINATE SCHEDULE

POINT NUMBERS	STATION	OFFSET	NORTHING	EASTING	DESCRIPTION
758	15+70.43	24.91 LT	2592869.1113	1603719.0453	FOUND YELLOW PLASTIC CAP
759	16+62.75	24.85 LT	2592930.7389	1603787.7938	FOUND YELLOW PLASTIC CAP
761	17+75.13	141.51 LT	2593092.6242	1603793.5023	FOUND YELLOW PLASTIC CAP
762	17+75.13	45.12 LT	2593020.8865	1603857.8843	FOUND 5/8" REBAR

TBM COORDINATE SCHEDULE

POINT NUMBERS	STATION	OFFSET	NORTHING	EASTING	ELEVATION	DESCRIPTION
616	9+87.31	47.83 LT	2592497	1603270	29.51	SET SPIKE IN POWER POLE

LEGEND

- ○ FOUND PROPERTY CORNER
- SET 2" ALCAP ON 5/8"X30" REBAR
- TBM SET PROJECT TBM
- 601 POINT NUMBER, SEE COORDINATE SCHEDULE

0 50 100 Feet

CITY OF VALDEZ, ALASKA · OPPORTUNITIES IN EVERY SEASON

PTS
PROFESSIONAL & TECHNICAL SERVICES, INC.
CONSULTING • ENGINEERING • SURVEYING
912 EAST 15TH AVE, SUITE 200
ANCHORAGE, ALASKA 99501
PHONE: (907) 561-6237
FAX: (907) 563-3813
LICENSE# AECC924

STATE OF ALASKA · 49TH · MICHAEL G RUCINSKI · LS 14836 · 04-05-2020 · REGISTERED PROFESSIONAL LAND SURVEYOR

CITY OF VALDEZ
PAVEMENT MANAGEMENT PHASE 1
ROBE RIVER

DYLEN DRIVE
"DN" BOP TO "DN" STA 22+50

SURVEY CONTROL SHEET

DRAFTED | CHECKED | DESIGNED | A4 | LAYOUT | DATE/TIME 2/5/2020 3:49 PM | FILE Z:\VP-01\DWG ACTIVE\ROBE RIVER SCS.DWG

NO.	DATE	REVISION

STATE	PROJECT DESIGNATION	YEAR	SHEET NO.	TOTAL SHEETS
ALASKA	19-310-110	2020	A5	A19

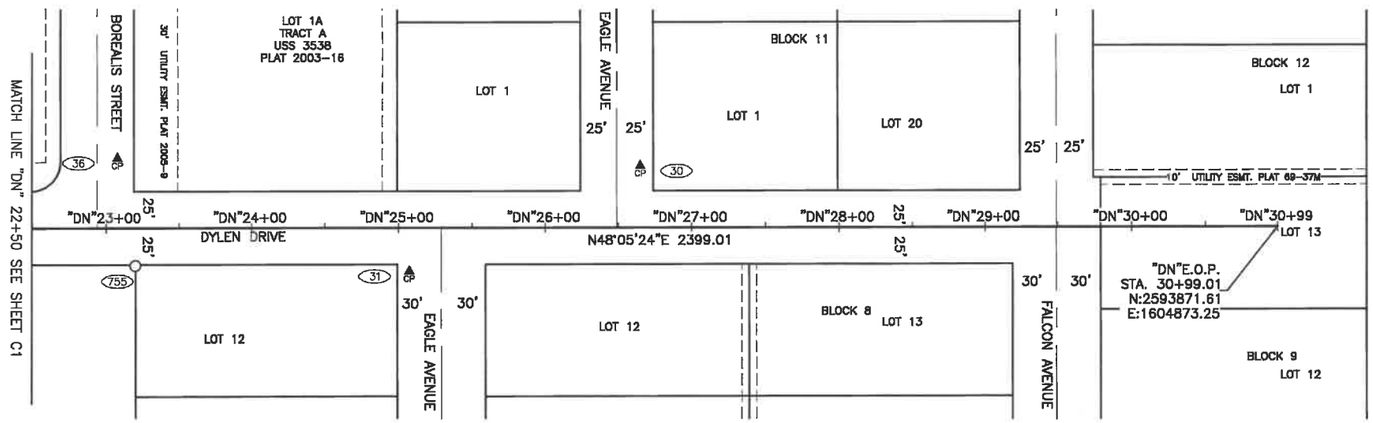

COORDINATE SCHEDULE					
POINT NUMBERS	STATION	OFFSET	NORTHING	EASTING	DESCRIPTION
36	23+07.79	47.81 LT	2593378.6902	1604252.4931	SET 2" ALUMINUM CAP ON 5/8" X 30" REBAR
31	25+07.18	29.43 RT	2593454.3883	1604452.4701	SET 2" ALUMINUM CAP ON 5/8" X 30" REBAR
30	26+64.93	42.09 LT	2593612.9833	1604522.0894	SET 2" ALUMINUM CAP ON 5/8" X 30" REBAR

COORDINATE SCHEDULE					
POINT NUMBERS	STATION	OFFSET	NORTHING	EASTING	DESCRIPTION
755	23+19.95	25.55 RT	2593332.2159	1604310.5389	FOUND 2" ALUMINUM CAP

LEGEND

- ○ FOUND PROPERTY CORNER
- SET 2" ALCAP ON 5/8"X30" REBAR
- (801) POINT NUMBER, SEE COORDINATE SCHEDULE

0 50 100 Feet

CITY OF VALDEZ, ALASKA
OPPORTUNITIES IN EVERY SEASON

PTS
PROFESSIONAL & TECHNICAL SERVICES, INC.
CONSULTING • ENGINEERING • SURVEYING
912 EAST 15TH AVE, SUITE 200
ANCHORAGE, ALASKA 99501
PHONE: (907) 561-6237
FAX: (907) 563-3813
LICENSE# AECC924

STATE OF ALASKA
49TH
MICHAEL G RUCINSKI
LS 14838
02-25-2020
REGISTERED PROFESSIONAL LAND SURVEYOR

CITY OF VALDEZ
PAVEMENT MANAGEMENT PHASE 1
ROBE RIVER

DYLEN DRIVE
"DN" STA 22+50 TO "DN" EOP

SURVEY CONTROL SHEET

DRAFTED | CHECKED | DESIGNED A5 | LAYOUT | DATE/TIME 2/5/2020 3:50 PM

FILE Z:\VP-011\DWG ACTIVE\ROBE RIVER SCS.DWG

NO.	DATE	REVISION

STATE	PROJECT DESIGNATION	YEAR	SHEET NO.	TOTAL SHEETS
ALASKA	19-310-110	2020	A6	A19

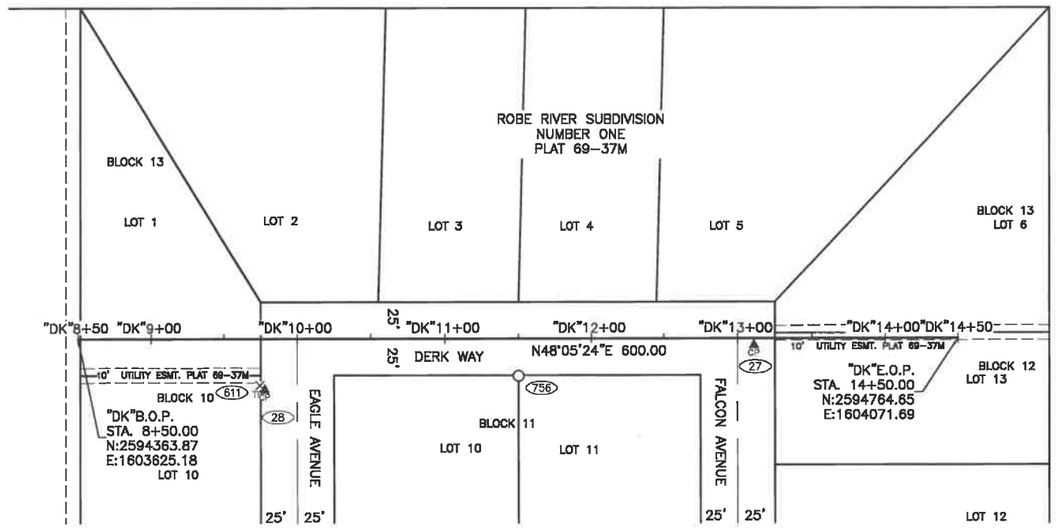

COORDINATE SCHEDULE					
POINT NUMBERS	STATION	OFFSET	NORTHING	EASTING	DESCRIPTION
28	9+77.86	34.72 RT	2594423.4290	1603743.5198	SET 2" ALUMINUM CAP ON 5/8" X 30" REBAR
27	13+11.17	4.74 RT	2594668.3829	1603971.5384	SET 2" ALUMINUM CAP ON 5/8" X 30" REBAR

COORDINATE SCHEDULE					
POINT NUMBERS	STATION	OFFSET	NORTHING	EASTING	DESCRIPTION
756	11+50.14	25.36 RT	2594545.4787	1603865.4804	FOUND YELLOW PLASTIC CAP

TBM COORDINATE SCHEDULE						
POINT NUMBERS	STATION	OFFSET	NORTHING	EASTING	ELEVATION	DESCRIPTION
611	9+74.44	31.74 RT	2594423	1603739	37.27	"X" SCRIBED ON NORTH EAST BOLT OF FIRE HYDRANT

LEGEND

- ○ FOUND PROPERTY CORNER
- CP SET 2" ALCAP ON 5/8"X30" REBAR
- TBM SET PROJECT TBM
- 601 POINT NUMBER, SEE COORDINATE SCHEDULE

0 50 100 Feet

CITY OF VALDEZ, ALASKA
OPPORTUNITIES IN EVERY SEASON

PTS
PROFESSIONAL & TECHNICAL SERVICES, INC.
CONSULTING • ENGINEERING • SURVEYING
912 EAST 15TH AVE, SUITE 200
ANCHORAGE, ALASKA 99501
PHONE:(907) 561-6237
FAX:(907) 563-3813
LICENSE# AECC924

STATE OF ALASKA
49TH
MICHAEL G RUCINSKI
LS 14836
04-05-2020
REGISTERED PROFESSIONAL LAND SURVEYOR

CITY OF VALDEZ
PAVEMENT MANAGEMENT PHASE 1
ROBE RIVER

DERK WAY
"DK" BOP TO "DK" EOP

SURVEY CONTROL SHEET

DRAFTED | CHECKED | DESIGNED | A6 | LAYOUT | 2/5/2020 3:50 PM | DATE/TIME

FILE Z:\VP-01\DWG ACTIVE\ROBE RIVER SCS.DWG

NO.	DATE	REVISION

STATE	PROJECT DESIGNATION	YEAR	SHEET NO.	TOTAL SHEETS
ALASKA	19-310-110	2020	A7	A19

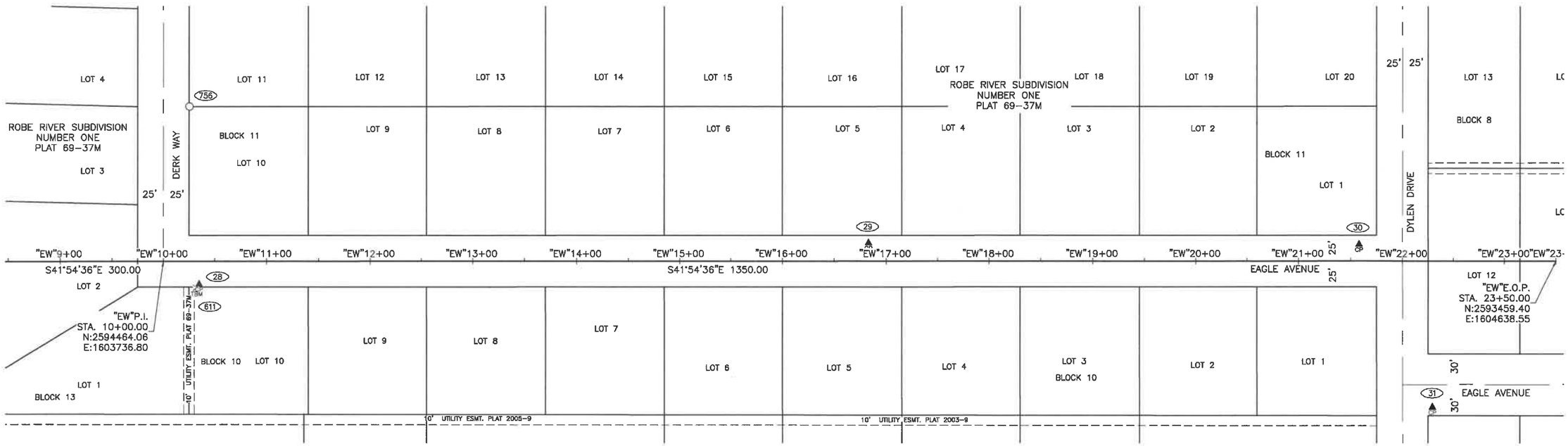

COORDINATE SCHEDULE					
POINT NUMBERS	STATION	OFFSET	NORTHING	EASTING	DESCRIPTION
28	10+34.72	22.14 RT	2594423.4290	1603743.5198	SET 2" ALUMINUM CAP ON 5/8" X 30" REBAR
29	16+82.62	17.43 LT	2593967.7011	1604205.7432	SET 2" ALUMINUM CAP ON 5/8" X 30" REBAR
30	21+57.91	15.92 LT	2593612.9833	1604522.0894	SET 2" ALUMINUM CAP ON 5/8" X 30" REBAR
31	22+29.43	141.83 RT	2593454.3883	1604452.4701	SET 2" ALUMINUM CAP ON 5/8" X 30" REBAR

COORDINATE SCHEDULE					
POINT NUMBERS	STATION	OFFSET	NORTHING	EASTING	DESCRIPTION
756	10+25.36	150.14 LT	2594545.4787	1603865.4804	FOUND YELLOW PLASTIC CAP

COORDINATE SCHEDULE						
POINT NUMBERS	STATION	OFFSET	NORTHING	EASTING	ELEVATION	DESCRIPTION
611	10+31.74	25.56 RT	2594423	1603739	37.27	"X" SCRIBED ON NORTH EAST BOLT OF FIRE HYDRANT

LEGEND

- ○ FOUND PROPERTY CORNER
- CP SET 2" ALCAP ON 5/8"X30" REBAR
- TBM SET PROJECT TBM
- 601 POINT NUMBER, SEE COORDINATE SCHEDULE

0 50 100 Feet

CITY OF VALDEZ, ALASKA
OPPORTUNITIES IN EVERY SEASON

PES
PROFESSIONAL & TECHNICAL SERVICES, INC.
CONSULTING • ENGINEERING • SURVEYING
912 EAST 15TH AVE, SUITE 200
ANCHORAGE, ALASKA 99501
PHONE: (907) 561-5237
FAX: (907) 563-3813
LICENSE# AECC924

STATE OF ALASKA
49TH
MICHAEL G RUCINSKI
LS 14636
09-05-2020
REGISTERED PROFESSIONAL LAND SURVEYOR

CITY OF VALDEZ
PAVEMENT MANAGEMENT PHASE 1
ROBE RIVER

EAGLE AVENUE
"EW" STA 8+50 TO "EW" EOP

SURVEY CONTROL SHEET

DRAFTED | CHECKED | DESIGNED | A7 | LAYOUT | 2/5/2020 3:50 PM | DATE/TIME

FILE Z:\VP-01\DWG ACTIVE\ROBE RIVER SCS.DWG

NO.	DATE	REVISION

STATE	PROJECT DESIGNATION	YEAR	SHEET NO.	TOTAL SHEETS
ALASKA	19-310-110	2020	A8	A19

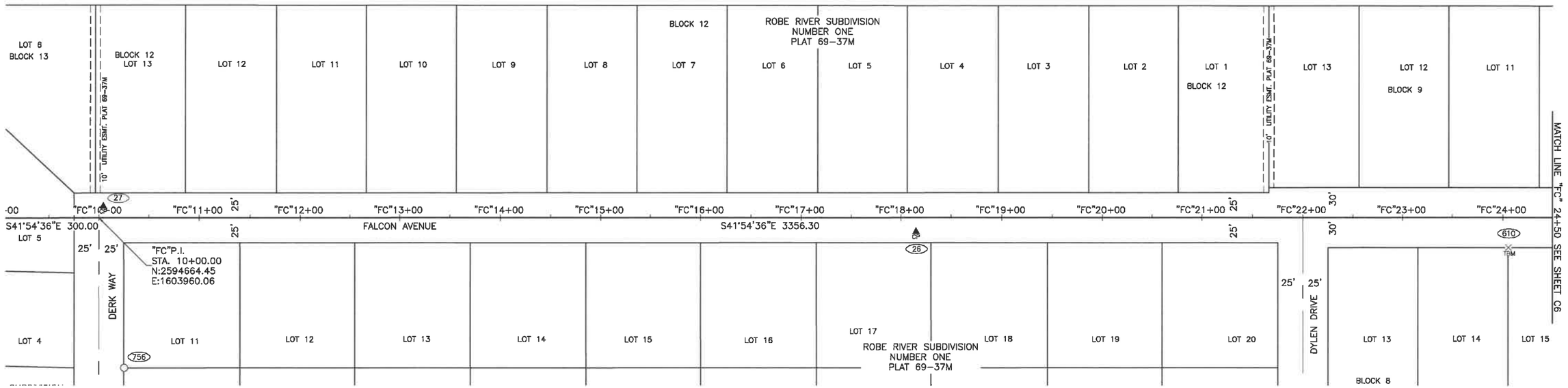

COORDINATE SCHEDULE					
POINT NUMBERS	STATION	OFFSET	NORTHING	EASTING	DESCRIPTION
27	10+04.74	11.17 LT	2594668.3829	1603971.5384	SET 2" ALUMINUM CAP ON 5/8" X 30" REBAR
26	18+15.13	14.32 RT	2594048.2719	1604493.8846	SET 2" ALUMINUM CAP ON 5/8" X 30" REBAR

COORDINATE SCHEDULE					
POINT NUMBERS	STATION	OFFSET	NORTHING	EASTING	DESCRIPTION
756	10+25.36	149.86 RT	2594545.4787	1603865.4804	FOUND YELLOW PLASTIC CAP

	A	B	C	D	E	F	G
1	COORDINATE SCHEDULE						
2	POINT NUMBERS	STATION	OFFSET	NORTHING	EASTING	ELEVATION	DESCRIPTION
3	610	24+05.30	29.95 RT	2593599	1604876	48.13	"X" SCRIBED ON NORTH EAST BOLT OF FIRE HYDRANT

LEGEND

- ○ FOUND PROPERTY CORNER
- ▲ CP SET 2" ALCAP ON 5/8"X30" REBAR
- ✕ TBM SET PROJECT TBM
- (601) POINT NUMBER, SEE COORDINATE SCHEDULE

0 50 100 Feet

CITY OF VALDEZ, ALASKA
OPPORTUNITIES IN EVERY SEASON

PTS
PROFESSIONAL & TECHNICAL SERVICES, INC.
CONSULTING • ENGINEERING • SURVEYING
912 EAST 15TH AVE. SUITE 200
ANCHORAGE, ALASKA 99501
PHONE: (907) 561-6237
FAX: (907) 563-3813
LICENSE# AECC924

STATE OF ALASKA
49TH
MICHAEL G RUCINSKI
LS 14838
09-05-2020
REGISTERED PROFESSIONAL LAND SURVEYOR

CITY OF VALDEZ
PAVEMENT MANAGEMENT PHASE 1

ROBE RIVER
FALCON AVENUE
"FC" STA 9+00 TO "FC" STA 24+50

SURVEY CONTROL SHEET

DRAFTED | CHECKED | DESIGNED | A8 | LAYOUT | 2/5/2020 3:51 PM | DATE/TIME

FILE Z:\VP-01\DWG ACTIVE\ROBE RIVER SCS.DWG

NO.	DATE	REVISION

STATE	PROJECT DESIGNATION	YEAR	SHEET NO.	TOTAL SHEETS
ALASKA	19-310-110	2020	A9	A19

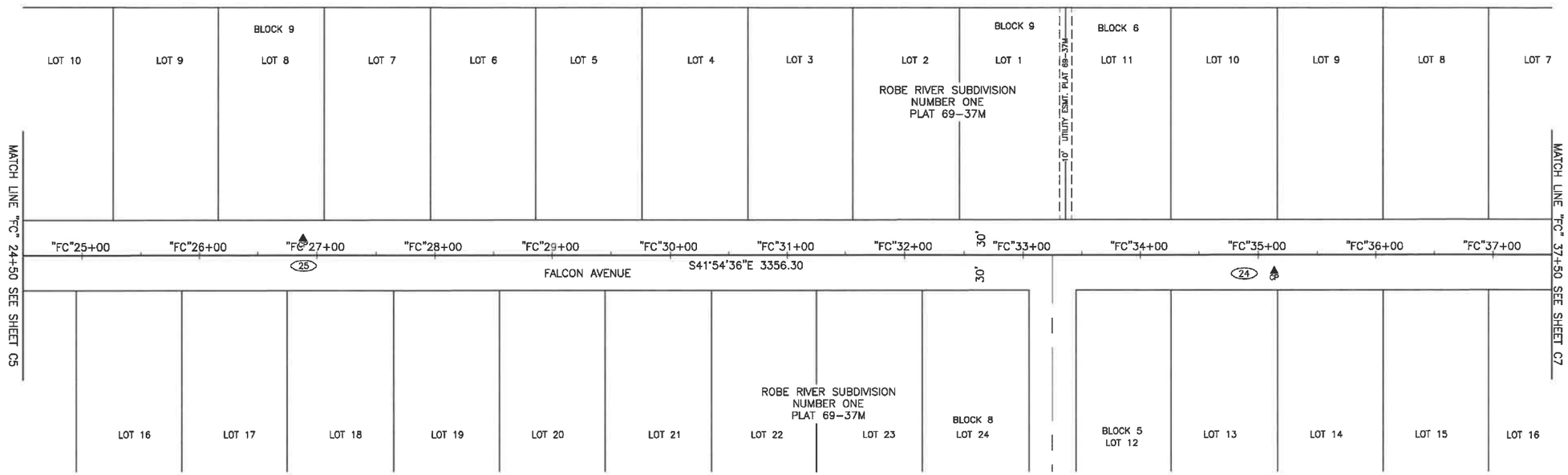

COORDINATE SCHEDULE					
POINT NUMBERS	STATION	OFFSET	NORTHING	EASTING	DESCRIPTION
25	26+88.40	14.23 LT	2593417.4584	1605098.4475	SET 2" ALUMINUM CAP ON 5/8" X 30" REBAR
24	35+13.53	13.98 RT	2592784.5626	1605628.6039	SET 2" ALUMINUM CAP ON 5/8" X 30" REBAR

LEGEND

CP SET 2" ALCAP ON 5/8"X30" REBAR

601 POINT NUMBER, SEE COORDINATE SCHEDULE

0 50 100 Feet

CITY OF VALDEZ, ALASKA
OPPORTUNITIES IN EVERY SEASON

PTS
PROFESSIONAL & TECHNICAL SERVICES, INC.
CONSULTING • ENGINEERING • SURVEYING
912 EAST 15TH AVE, SUITE 200
ANCHORAGE, ALASKA 99501
PHONE:(907) 561-6237
FAX:(907) 563-3813
LICENSE# AECC924

STATE OF ALASKA
49TH
MICHAEL G RUCINSKI
LS 14336
02-05-2020
REGISTERED PROFESSIONAL LAND SURVEYOR

CITY OF VALDEZ
PAVEMENT MANAGEMENT PHASE 1

ROBE RIVER
FALCON AVENUE
"FC" STA 24+50 TO "FC" STA 37+50

SURVEY CONTROL SHEET

DRAFTED | CHECKED | DESIGNED | A9 | LAYOUT | DATE/TIME 2/5/2020 3:51 PM | FILE Z:\VP-01\DWG ACTIVE\ROBE RIVER SCS.DWG

NO.	DATE	REVISION	STATE	PROJECT DESIGNATION	YEAR	SHEET NO.	TOTAL SHEETS
			ALASKA	19-310-110	2020	A10	A19

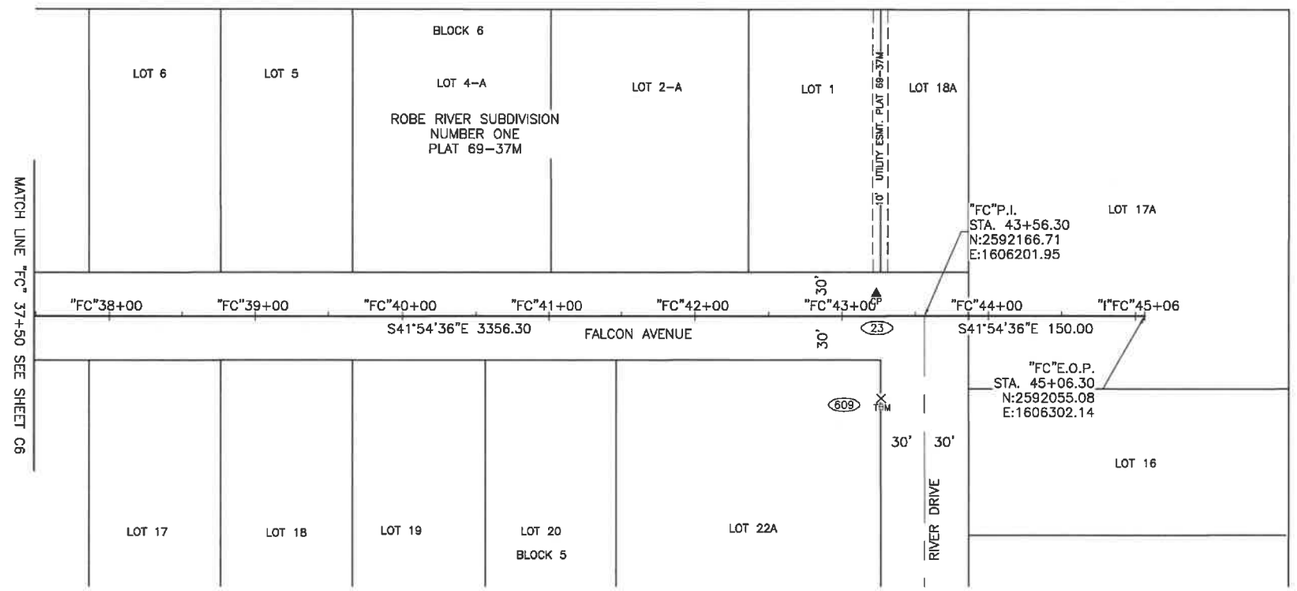

COORDINATE SCHEDULE					
POINT NUMBERS	STATION	OFFSET	NORTHING	EASTING	DESCRIPTION
23	43+23.27	15.27 LT	2592201	1606191	SET 2" ALUMINUM CAP ON 5/8" X 30" REBAR

TBM COORDINATE SCHEDULE						
POINT NUMBERS	STATION	OFFSET	NORTHING	EASTING	ELEVATION	DESCRIPTION
609	43+26.59	55.82 RT	2592152	1606141	37.49	"X" SCRIBED ON SOUTH EAST BOLT OF FIRE HYDRANT

LEGEND

CP — SET 2" ALCAP ON 5/8"X30" REBAR

TBM — SET PROJECT TBM

601 — POINT NUMBER, SEE COORDINATE SCHEDULE

0 50 100 Feet

CITY OF VALDEZ, ALASKA
OPPORTUNITIES IN EVERY SEASON

PTS
PROFESSIONAL & TECHNICAL SERVICES, INC.
CONSULTING • ENGINEERING • SURVEYING
912 EAST 15TH AVE, SUITE 200
ANCHORAGE, ALASKA 99501
PHONE: (907) 561-8237
FAX: (907) 563-3813
LICENSE# AECC924

STATE OF ALASKA
49TH
MICHAEL G RUCINSKI
LS 14836
04-05-2020
REGISTERED PROFESSIONAL LAND SURVEYOR

CITY OF VALDEZ
PAVEMENT MANAGEMENT PHASE 1
ROBE RIVER

FALCON AVENUE
"FC" STA 37+50 TO "FC" EOP

SURVEY CONTROL SHEET

DRAFTED | CHECKED | DESIGNED | A10 | LAYOUT | 2/5/2020 3:51 PM | DATE/TIME

FILE Z:\VP-01\DWG ACTIVE\ROBE RIVER SCS.DWG

NO.	DATE	REVISION

STATE	PROJECT DESIGNATION	YEAR	SHEET NO.	TOTAL SHEETS
ALASKA	19-310-110	2020	A11	A19

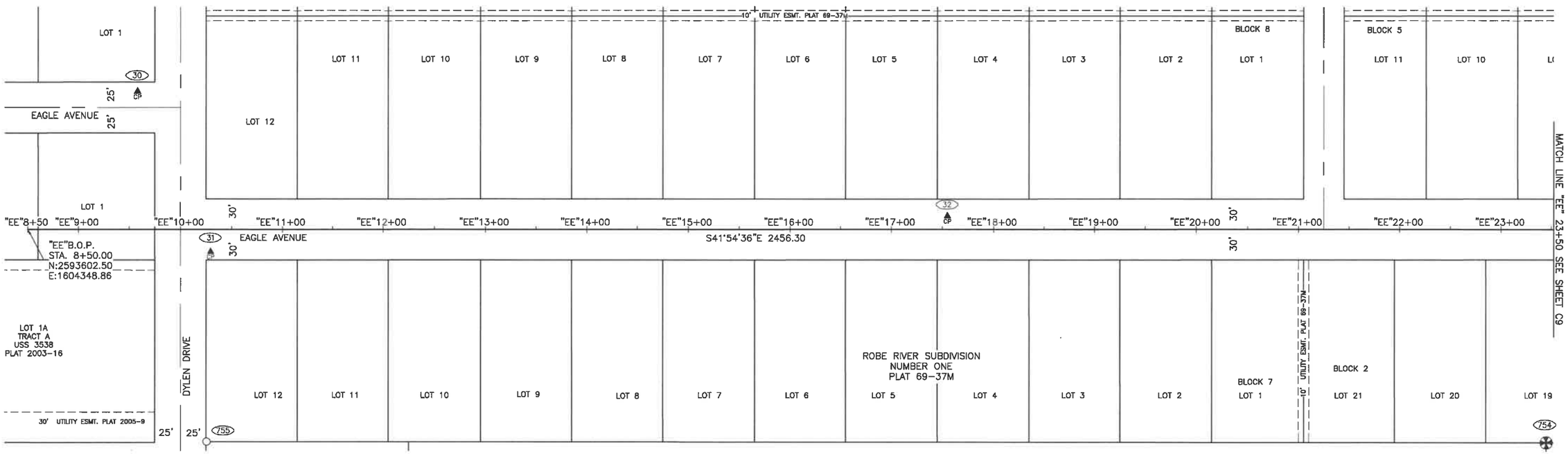

LEGEND

- FOUND PRIMARY GOVERNMENT MONUMENT
- CP SET 2" ALCAP ON 5/8"X30" REBAR
- TBM SET PROJECT TBM
- 801 POINT NUMBER, SEE COORDINATE SCHEDULE

COORDINATE SCHEDULE					
POINT NUMBERS	STATION	OFFSET	NORTHING	EASTING	DESCRIPTION
30	9+57.91	135.92 LT	2593612.9833	1604522.0894	SET 2" ALUMINUM CAP ON 5/8" X 30" REBAR
31	10+29.43	21.83 RT	2593454.3883	1604452.4701	SET 2" ALUMINUM CAP ON 5/8" X 30" REBAR
32	17+55.03	13.16 LT	2592937.7732	1604963.1855	SET 2" ALUMINUM CAP ON 5/8" X 30" REBAR

COORDINATE SCHEDULE					
POINT NUMBERS	STATION	OFFSET	NORTHING	EASTING	DESCRIPTION
755	10+25.55	209.06 RT	2593332.2159	1604310.5389	FOUND 2" ALUMINUM CAP
754	23+45.00	210.00 RT	2592349.6553	1605191.1871	FOUND 3 1/2" BRASS CAP ON IRON PIPE

0 50 100 Feet

CITY OF VALDEZ, ALASKA
OPPORTUNITIES IN EVERY SEASON

PTS
PROFESSIONAL & TECHNICAL SERVICES, INC.
CONSULTING • ENGINEERING • SURVEYING
912 EAST 15TH AVE, SUITE 200
ANCHORAGE, ALASKA 99501
PHONE:(907) 561-6237
FAX:(907) 563-3813
LICENSE# AECC924

STATE OF ALASKA
49TH
MICHAEL G RUCINSKI
LS 14836
09-05-2020
REGISTERED PROFESSIONAL LAND SURVEYOR

CITY OF VALDEZ
PAVEMENT MANAGEMENT PHASE 1

ROBE RIVER

EAGLE AVENUE
"EE" BOP TO "EE" STA 23+50

SURVEY CONTROL SHEET

DRAFTED | CHECKED | DESIGNED | A11 | LAYOUT | DATE/TIME 2/5/2020 3:51 PM | FILE Z:\VP-01\DWG ACTIVE\ROBE RIVER SCS.DWG

NO.	DATE	REVISION

STATE	PROJECT DESIGNATION	YEAR	SHEET NO.	TOTAL SHEETS
ALASKA	19-310-110	2020	A12	A19

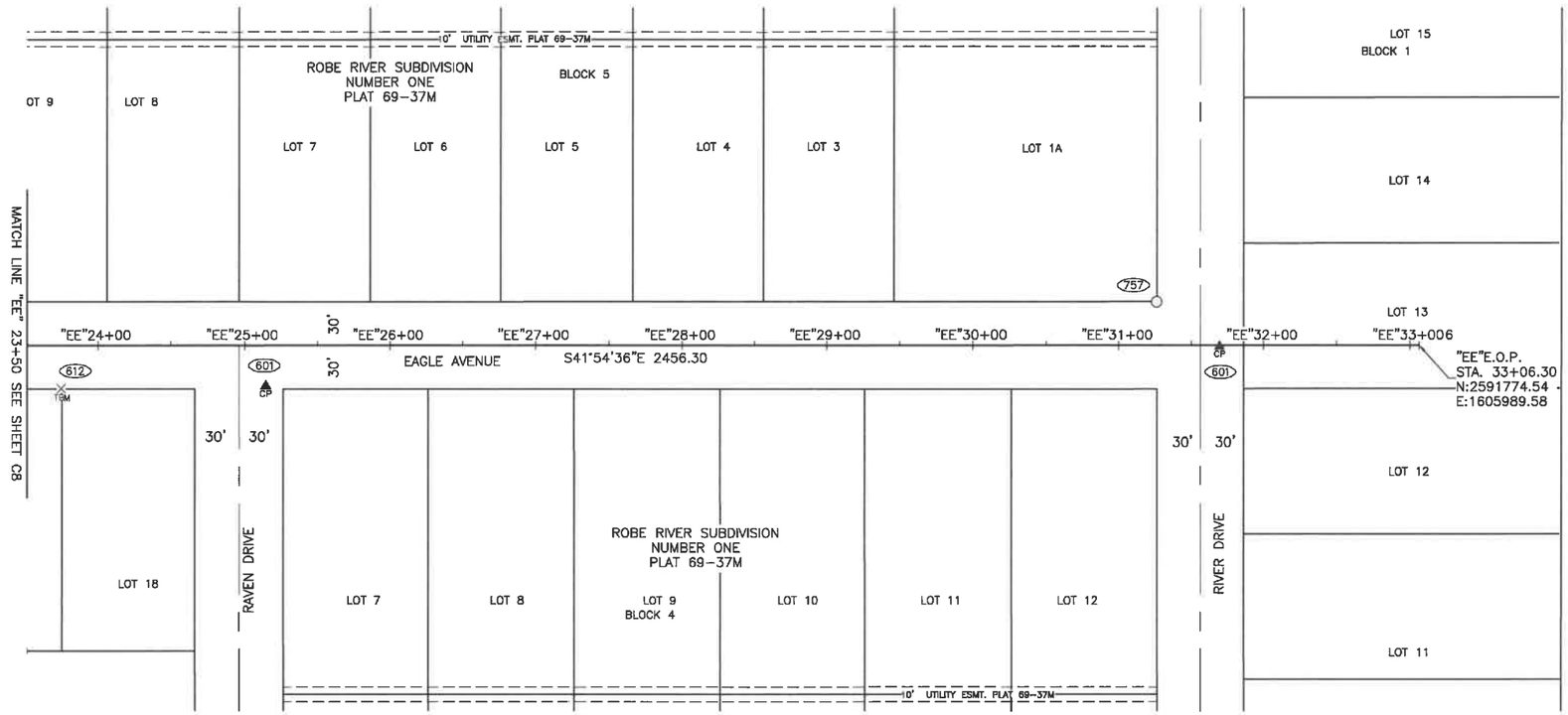

COORDINATE SCHEDULE					
POINT NUMBERS	STATION	OFFSET	NORTHING	EASTING	DESCRIPTION
33	25+14.48	28.15 RT	2592345.0009	1605439.7279	SET 2" ALUMINUM CAP ON 5/8" X 30" REBAR
22	31+69.57	0.71 RT	2591875.8188	1605897.7249	SET 2" ALUMINUM CAP ON 5/8" X 30" REBAR

COORDINATE SCHEDULE					
POINT NUMBERS	STATION	OFFSET	NORTHING	EASTING	DESCRIPTION
757	31+26.07	29.89 LT	2591928.6265	1605891.4409	FOUND 5/8" REBAR

TBM COORDINATE SCHEDULE						
POINT NUMBERS	STATION	OFFSET	NORTHING	EASTING	ELEVATION	DESCRIPTION
612	23+74.51	29.58 RT	2592448	1605345	40.74	"X" SCRIBED ON NORTH EAST BOLT OF FIRE HYDRANT

LEGEND

- FOUND PROPERTY CORNER
- CP — SET 2" ALCAP ON 5/8"X30" REBAR
- TBM — SET PROJECT TBM
- 601 — POINT NUMBER, SEE COORDINATE SCHEDULE

0 50 100 Feet

CITY OF VALDEZ, ALASKA
OPPORTUNITIES IN EVERY SEASON

PTS
PROFESSIONAL & TECHNICAL SERVICES, INC.
CONSULTING • ENGINEERING • SURVEYING
912 EAST 15TH AVE, SUITE 200
ANCHORAGE, ALASKA 99501
PHONE:(907) 561-6237
FAX:(907) 563-3813
LICENSE# AECC924

STATE OF ALASKA
49TH
MICHAEL G RUCHSKI
LS 14836
02-05-2020
REGISTERED PROFESSIONAL LAND SURVEYOR

CITY OF VALDEZ
PAVEMENT MANAGEMENT PHASE 1
ROBE RIVER

EAGLE AVENUE
"EE" STA 23+50 TO "EE" EOP

SURVEY CONTROL SHEET

DRAFTED | CHECKED | DESIGNED | A12 | LAYOUT | 2/5/2020 3:52 PM | DATE/TIME | FILE Z:\VP-01\DWG ACTIVE\ROBE RIVER SCS.DWG

NO.	DATE	REVISION

STATE	PROJECT DESIGNATION	YEAR	SHEET NO.	TOTAL SHEETS
ALASKA	19-310-110	2020	A13	A19

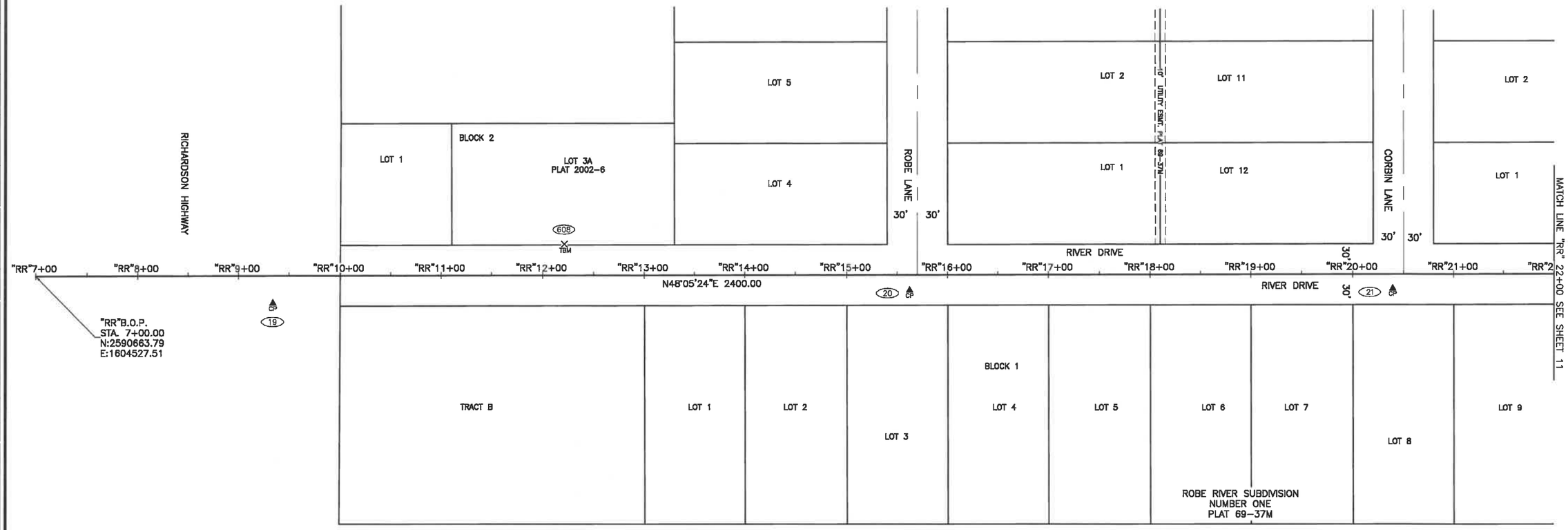

COORDINATE SCHEDULE					
POINT NUMBERS	STATION	OFFSET	NORTHING	EASTING	DESCRIPTION
19	9+33.93	27.53 RT	2590799.5697	1604719.9879	SET 2" ALUMINUM CAP ON 5/8" X 30" REBAR
20	15+62.30	14.88 RT	2591228.7027	1605179.1648	SET 2" ALUMINUM CAP ON 5/8" X 30" REBAR
21	20+38.78	14.30 RT	2591547.4110	1605533.3776	SET 2" ALUMINUM CAP ON 5/8" X 30" REBAR

COORDINATE SCHEDULE					
POINT NUMBERS	STATION	OFFSET	NORTHING	EASTING	DESCRIPTION
753	10+02.64	811.30 LT	2591469.5250	1604210.6117	FOUND 3 1/4" ALUMINUM MONUMENT

TBM COORDINATE SCHEDULE						
POINT NUMBER	STATION	OFFSET	NORTHING	EASTING	ELEVATION	DESCRIPTION
608	12+21.25	30.54 LT	2591035	1604895	30.81	"X" SCRIBED ON SOUTH EAST BOLT OF FIRE HYDRANT

LEGEND

- CP — SET 2" ALCAP ON 5/8"X30" REBAR
- TBM — SET PROJECT TBM
- 601 — POINT NUMBER, SEE COORDINATE SCHEDULE

0 50 100 Feet

CITY OF VALDEZ, ALASKA
OPPORTUNITIES IN EVERY SEASON

PTS
PROFESSIONAL & TECHNICAL SERVICES, INC.
CONSULTING • ENGINEERING • SURVEYING
912 EAST 15TH AVE, SUITE 200
ANCHORAGE, ALASKA 99501
PHONE:(907) 561-6237
FAX:(907) 563-3813
LICENSE# AECC924

STATE OF ALASKA
49TH
MICHAEL G RUCINSKI
LS 14836
01-05-2020
REGISTERED PROFESSIONAL LAND SURVEYOR

CITY OF VALDEZ
PAVEMENT MANAGEMENT PHASE 1

ROBE RIVER

RIVER DRIVE
"RR" BOP TO "RR" STA 22+00

SURVEY CONTROL SHEET

DRAFTED | CHECKED | DESIGNED | A13 | LAYOUT | 2/5/2020 3:52 PM | DATE/TIME

FILE Z:\VP-01\DWG ACTIVE\ROBE RIVER SCS.DWG

NO.	DATE	REVISION

STATE	PROJECT DESIGNATION	YEAR	SHEET NO.	TOTAL SHEETS
ALASKA	19-310-110	2020	A14	A19

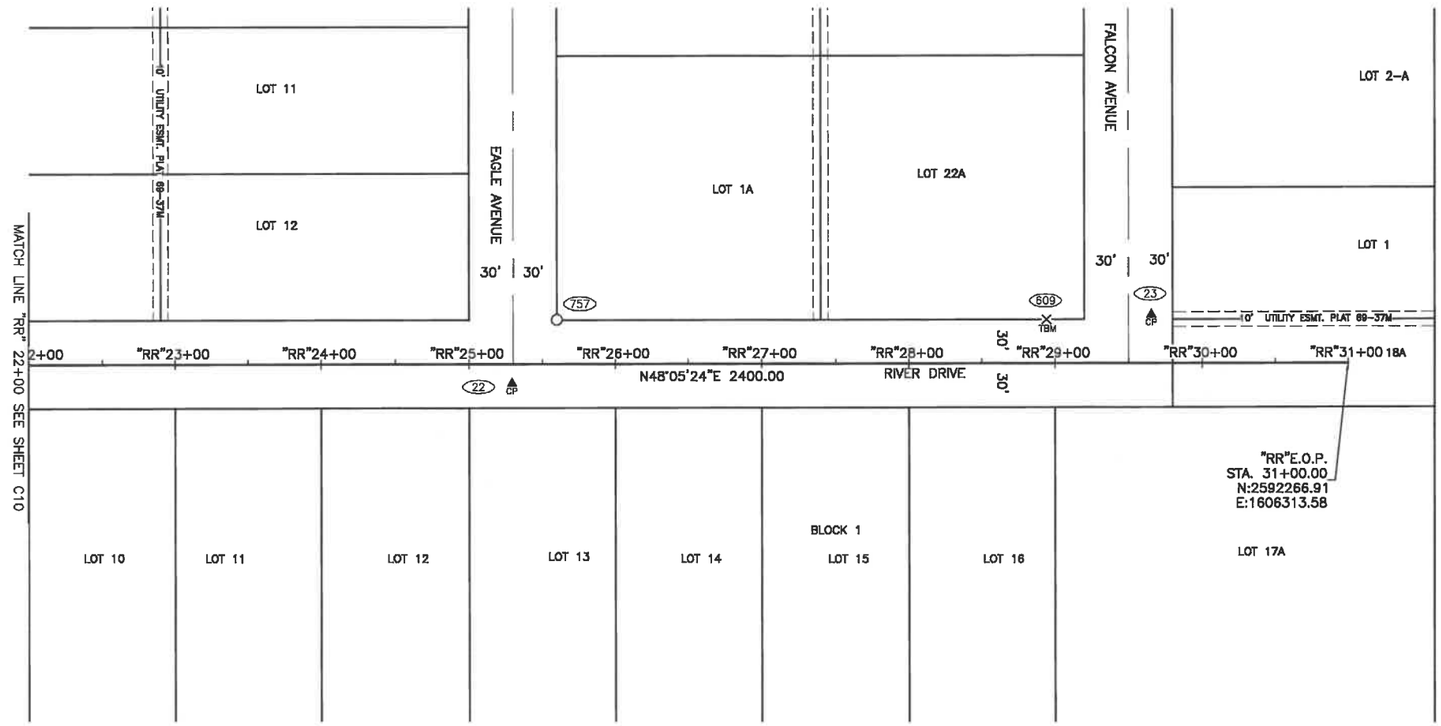

COORDINATE SCHEDULE					
POINT NUMBERS	STATION	OFFSET	NORTHING	EASTING	DESCRIPTION
22	25+29.29	13.27 RT	2591875.8188	1605897.7249	SET 2" ALUMINUM CAP ON 5/8" X 30" REBAR
23	29+65.27	33.03 LT	2592201.4912	1606191.2455	SET 2" ALUMINUM CAP ON 5/8" X 30" REBAR

COORDINATE SCHEDULE					
POINT NUMBERS	STATION	OFFSET	NORTHING	EASTING	DESCRIPTION
757	25+59.89	30.23 LT	2591928.6265	1605891.4409	FOUND 5/8" REBAR

COORDINATE SCHEDULE						
POINT NUMBERS	STATION	OFFSET	NORTHING	EASTING	ELEVATION	DESCRIPTION
609	28+94.18	29.71 LT	2592152	1606141	37.49	"X" SCRIBED ON SOUTH EAST BOLT OF FIRE HYDRANT

LEGEND

- ○ FOUND PROPERTY CORNER
- CP SET 2" ALCAP ON 5/8"X30" REBAR
- TBM SET PROJECT TBM
- (801) POINT NUMBER, SEE COORDINATE SCHEDULE

0 50 100 Feet

CITY OF VALDEZ, ALASKA
OPPORTUNITIES IN EVERY SEASON

PTS
PROFESSIONAL & TECHNICAL SERVICES, INC.
CONSULTING • ENGINEERING • SURVEYING
912 EAST 15TH AVE. SUITE 200
ANCHORAGE, ALASKA 99501
PHONE: (907) 561-6237
FAX: (907) 563-3813
LICENSE# AECC924

STATE OF ALASKA
49TH
MICHAEL G RUCINSKI
LS 14836
04-05-2020
REGISTERED PROFESSIONAL LAND SURVEYOR

CITY OF VALDEZ
PAVEMENT MANAGEMENT PHASE 1
ROBE RIVER

RIVER DRIVE
"RR" STA 22+00 TO "RR" EOP

SURVEY CONTROL SHEET

DRAFTED | CHECKED | DESIGNED | A14 | LAYOUT | 2/5/2020 3:52 PM | DATE/TIME

FILE Z:\VP-01\DWG ACTIVE\ROBE RIVER SCS.DWG

NO.	DATE	REVISION

STATE	PROJECT DESIGNATION	YEAR	SHEET NO.	TOTAL SHEETS
ALASKA	19-310-110	2020	A15	A19

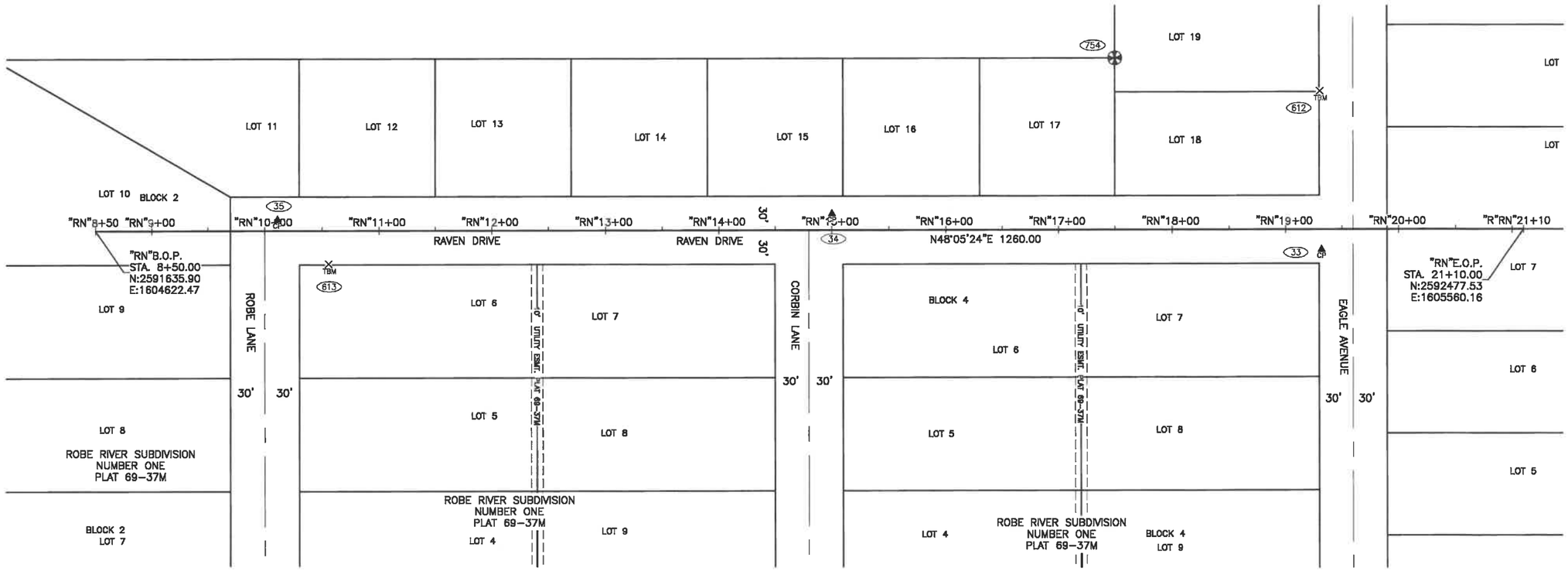

COORDINATE SCHEDULE					
POINT NUMBERS	STATION	OFFSET	NORTHING	EASTING	DESCRIPTION
35	10+11.09	9.15 LT	2591750.3076	1604736.2382	SET 2" ALUMINUM CAP ON 5/8" X 30" REBAR
34	15+00.21	14.09 LT	2592080.6978	1605096.9420	SET 2" ALUMINUM CAP ON 5/8" X 30" REBAR
33	19+31.85	18.18 RT	2592345.0009	1605439.7279	SET 2" ALUMINUM CAP ON 5/8" X 30" REBAR

COORDINATE SCHEDULE					
POINT NUMBERS	STATION	OFFSET	NORTHING	EASTING	DESCRIPTION
754	17+50.00	151.30 LT	2592349.6553	1605191.1871	FOUND 3 1/4" BRASS CAP ON IRON PIPE

COORDINATE SCHEDULE						
POINT NUMBERS	STATION	OFFSET	NORTHING	EASTING	ELEVATION	DESCRIPTION
613	10+55.33	29.61 RT	2591751	1604795	36.88	"X" SCRIBED ON WEST BOLT OF FIRE HYDRANT
612	19+30.42	121.79 LT	2592448	1605345	40.74	"X" SCRIBED ON NORTH EST BOLT OF FIRE HYDRANT

LEGEND

- FOUND PRIMARY GOVERNMENT MONUMENT
- CP — SET 2" ALCAP ON 5/8"X30" REBAR
- TBM — SET PROJECT TBM
- 601 — POINT NUMBER, SEE COORDINATE SCHEDULE

0 50 100 Feet

CITY OF VALDEZ, ALASKA
OPPORTUNITIES IN EVERY SEASON

PTS
PROFESSIONAL & TECHNICAL SERVICES, INC.
CONSULTING • ENGINEERING • SURVEYING
912 EAST 15TH AVE, SUITE 200
ANCHORAGE, ALASKA 99501
PHONE: (907) 561-6237
FAX: (907) 563-3813
LICENSE# AECC924

STATE OF ALASKA
49TH
MICHAEL G RUCINSKI
LS 14836
01-05-2020
REGISTERED PROFESSIONAL LAND SURVEYOR

CITY OF VALDEZ
PAVEMENT MANAGEMENT PHASE 1

ROBE RIVER

RAVEN DRIVE
"RN" BOP TO "RN" EOP

SURVEY CONTROL SHEET

DRAFTED | CHECKED | DESIGNED | A15 | LAYOUT | DATE/TIME 2/5/2020 3:52 PM | FILE Z:\VP-01\DWG ACTIVE\ROBE RIVER SCS.DWG

NO.	DATE	REVISION

STATE	PROJECT DESIGNATION	YEAR	SHEET NO.	TOTAL SHEETS
ALASKA	19-310-110	2020	A16	A19

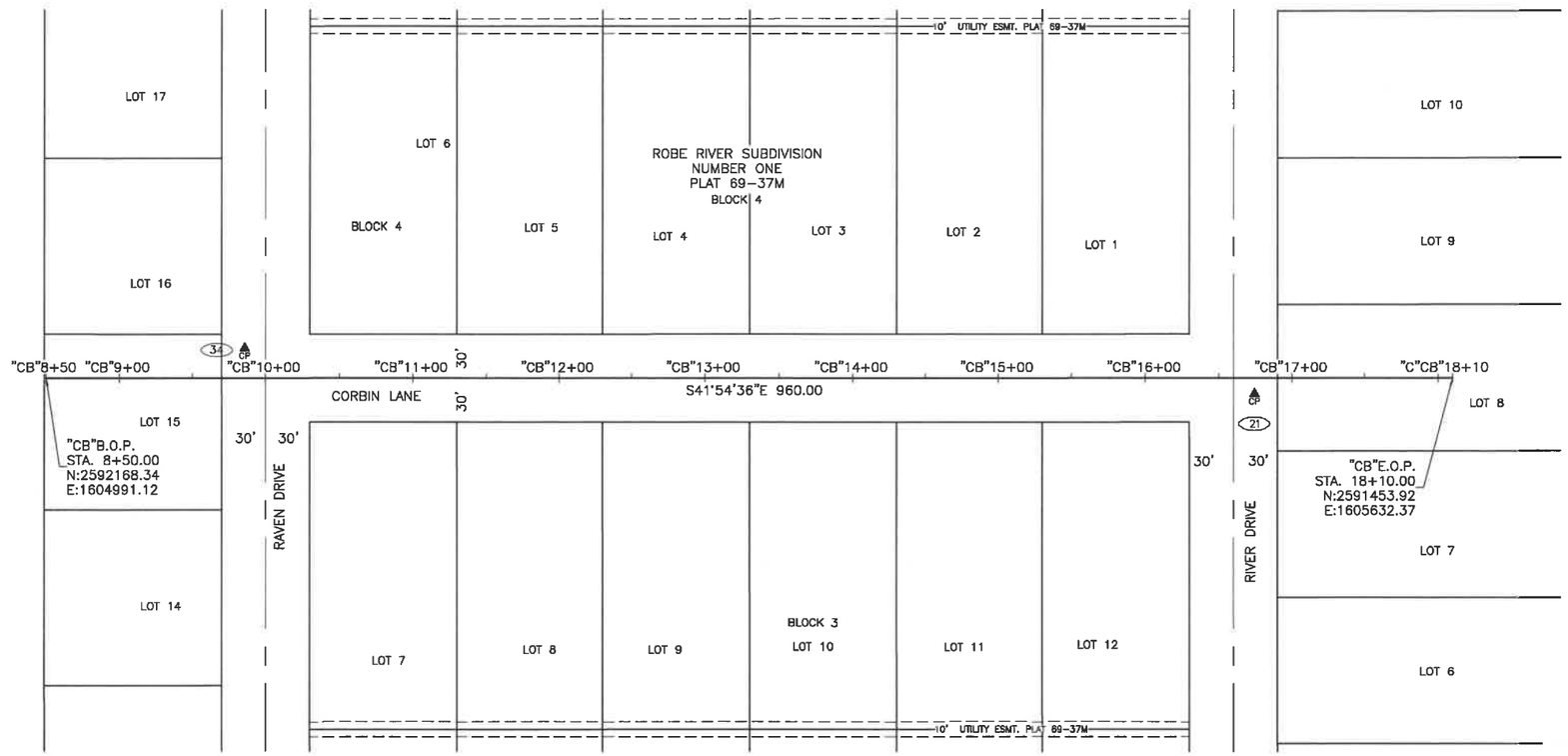

LEGEND

CP SET 2" ALCAP ON 5/8"X30" REBAR

601 POINT NUMBER, SEE COORDINATE SCHEDULE

0 50 100 Feet

COORDINATE SCHEDULE

POINT NUMBERS	STATION	OFFSET	NORTHING	EASTING	DESCRIPTION
34	9+85.91	20.21 LT	2592080.6978	1605096.9420	SET 2" ALUMINUM CAP ON 5/8" X 30" REBAR
21	16+74.30	11.22 RT	2591547.4110	1605533.3776	SET 2" ALUMINUM CAP ON 5/8" X 30" REBAR

CITY OF VALDEZ, ALASKA
OPPORTUNITIES IN EVERY SEASON

PTS
PROFESSIONAL & TECHNICAL SERVICES, INC.
CONSULTING • ENGINEERING • SURVEYING
912 EAST 15TH AVE, SUITE 200
ANCHORAGE, ALASKA 99501
PHONE: (907) 561-6237
FAX: (907) 563-3813
LICENSE# AECC924

STATE OF ALASKA
49TH
MICHAEL G RUCINSKI
LS 14836
01-05-2020
REGISTERED PROFESSIONAL LAND SURVEYOR

CITY OF VALDEZ
PAVEMENT MANAGEMENT PHASE 1
ROBE RIVER

CORBIN LANE
"CB" BOP TO "CB" EOP

SURVEY CONTROL SHEET

DRAFTED | CHECKED | DESIGNED | A16 | LAYOUT | 2/5/2020 3:53 PM | DATE/TIME

FILE Z:\VP-01\DWG ACTIVE\ROBE RIVER SCS.DWG

NO.	DATE	REVISION

STATE	PROJECT DESIGNATION	YEAR	SHEET NO.	TOTAL SHEETS
ALASKA	19-310-110	2020	A17	A19

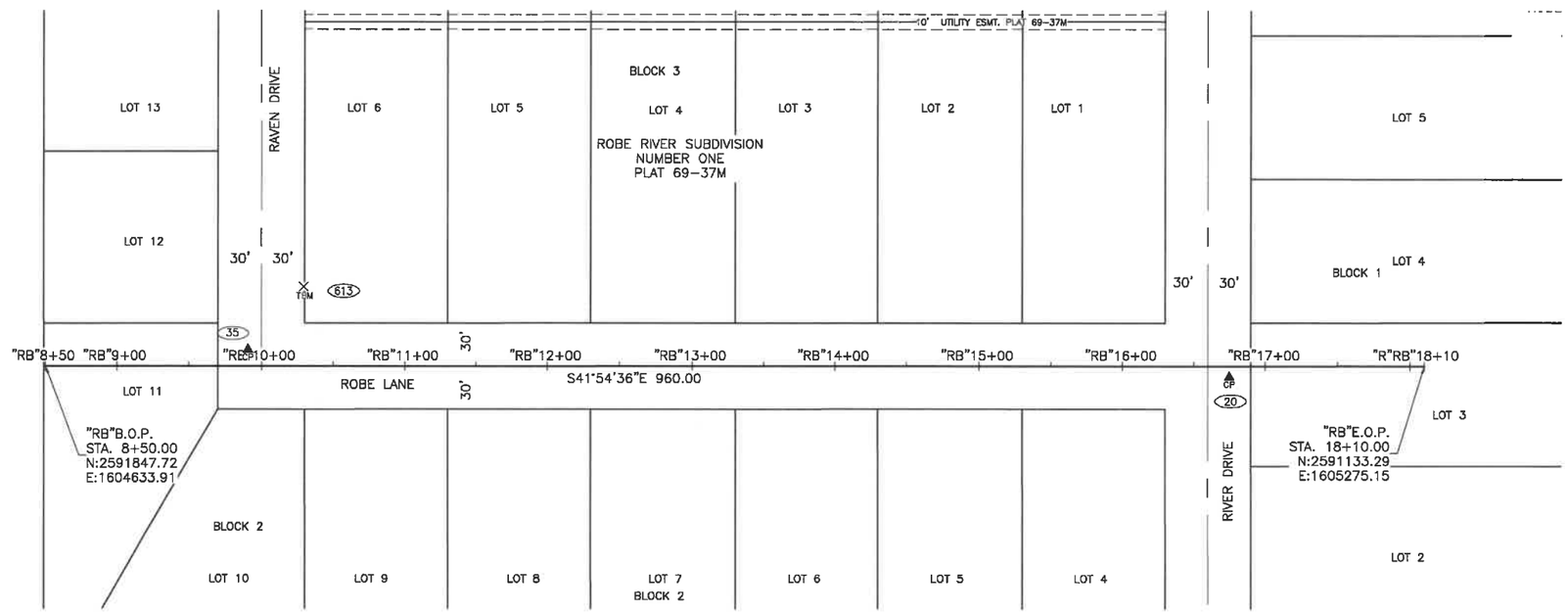

COORDINATE SCHEDULE					
POINT NUMBERS	STATION	OFFSET	NORTHING	EASTING	DESCRIPTION
35	9+90.85	11.09 LT	2591750.3076	1604736.2382	SET 2" ALUMINUM CAP ON 5/8" X 30" REBAR
20	16+74.88	7.70 RT	2591228.7027	1605179.1648	SET 2" ALUMINUM CAP ON 5/8" X 30" REBAR

COORDINATE SCHEDULE						
POINT NUMBERS	STATION	OFFSET	NORTHING	EASTING	ELEVATION	DESCRIPTION
613	10+29.61	55.33 LT	2591751	1604795	36.88	"X" SCRIBED ON WEST BOLT OF FIRE HYDRANT

LEGEND

CP — SET 2" ALCAP ON 5/8"X30" REBAR

TBM — SET PROJECT TBM

(601) — POINT NUMBER, SEE COORDINATE SCHEDULE

0 50 100 Feet

CITY OF VALDEZ, ALASKA
OPPORTUNITIES IN EVERY SEASON

PTS
PROFESSIONAL & TECHNICAL SERVICES, INC.
CONSULTING • ENGINEERING • SURVEYING
912 EAST 15TH AVE, SUITE 200
ANCHORAGE, ALASKA 99501
PHONE: (907) 561-6237
FAX: (907) 563-3813
LICENSE# AECC924

STATE OF ALASKA
49TH
MICHAEL G RUCINSKI
LS 14836
09-05-2020
REGISTERED PROFESSIONAL LAND SURVEYOR

CITY OF VALDEZ
PAVEMENT MANAGEMENT PHASE 1
ROBE RIVER

ROBE LANE
"RB" BOP TO "RB" EOP

SURVEY CONTROL SHEET

DRAFTED | CHECKED | DESIGNED | A17 | LAYOUT | DATE/TIME 2/5/2020 3:53 PM | FILE Z:\VP-01\DWG ACTIVE\ROBE RIVER SCS.DWG

NO.	DATE	REVISION

STATE	PROJECT DESIGNATION	YEAR	SHEET NO.	TOTAL SHEETS
ALASKA	19-310-110	2020	A18	A19

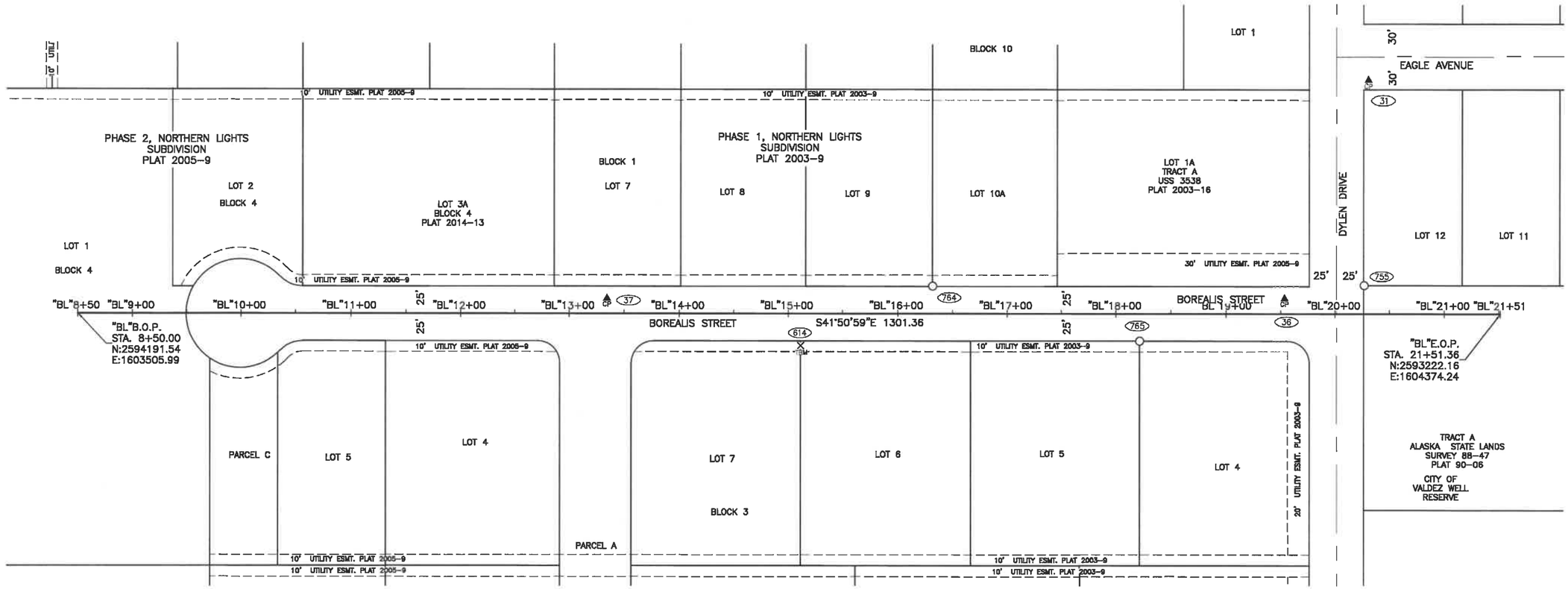

	A	B	C	D	E	F
1	COORDINATE SCHEDULE					
2	POINT NUMBERS	STATION	OFFSET	NORTHING	EASTING	DESCRIPTION
3	37	13+34.46	13.50 LT	2593839.6681	1603839.2704	SET 2" ALUMINUM CAP ON 5/8" X 30" REBAR
4	36	19+53.54	13.75 LT	2593378.6902	1604252.4931	SET 2" ALUMINUM CAP ON 5/8" X 30" REBAR

COORDINATE SCHEDULE					
POINT NUMBERS	STATION	OFFSET	NORTHING	EASTING	DESCRIPTION
764	16+31.40	25.29 LT	2593626.3550	1604046.1677	FOUND 2" ALUMINUM CAP
765	18+21.57	24.89 RT	2593451.2144	1604135.6641	FOUND 5/8" REBAR
755	20+26.88	25.98 LT	2593332.2159	1604310.5389	FOUND 2" ALUMINUM CAP

TBM COORDINATE SCHEDULE						
POINT NUMBERS	STATION	OFFSET	NORTHING	EASTING	ELEVATION	DESCRIPTION
614	15+11.47	29.60 RT	2593679	1603925	36.25	"X" SCRIBED ON NORTH EAST BOLT OF FIRE HYDRANT

LEGEND

- ○ FOUND PROPERTY CORNER
- ▲ CP SET 2" ALCAP ON 5/8"X30" REBAR
- ✕ TBM SET PROJECT TBM
- (801) POINT NUMBER, SEE COORDINATE SCHEDULE

0 50 100 Feet

CITY OF VALDEZ, ALASKA — OPPORTUNITIES IN EVERY SEASON

PTS
PROFESSIONAL & TECHNICAL SERVICES, INC.
CONSULTING • ENGINEERING • SURVEYING
912 EAST 15TH AVE, SUITE 200
ANCHORAGE, ALASKA 99501
PHONE:(907) 561-6237
FAX:(907) 563-3813
LICENSE# AECC924

STATE OF ALASKA 49TH MICHAEL G RUCINSKI LS 14836 02-05-2020 REGISTERED PROFESSIONAL LAND SURVEYOR

CITY OF VALDEZ
PAVEMENT MANAGEMENT PHASE 1

ROBE RIVER

BOREALIS STREET "BL" BOP TO "BL" EOP

SURVEY CONTROL SHEET

DRAFTED | CHECKED | DESIGNED | A18 | LAYOUT | DATE/TIME 2/5/2020 3:53 PM | FILE Z:\VP-01\DWG ACTIVE\ROBE RIVER SCS.DWG

NO.	DATE	REVISION

STATE	PROJECT DESIGNATION	YEAR	SHEET NO.	TOTAL SHEETS
ALASKA	19-310-110	2020	A19	A19

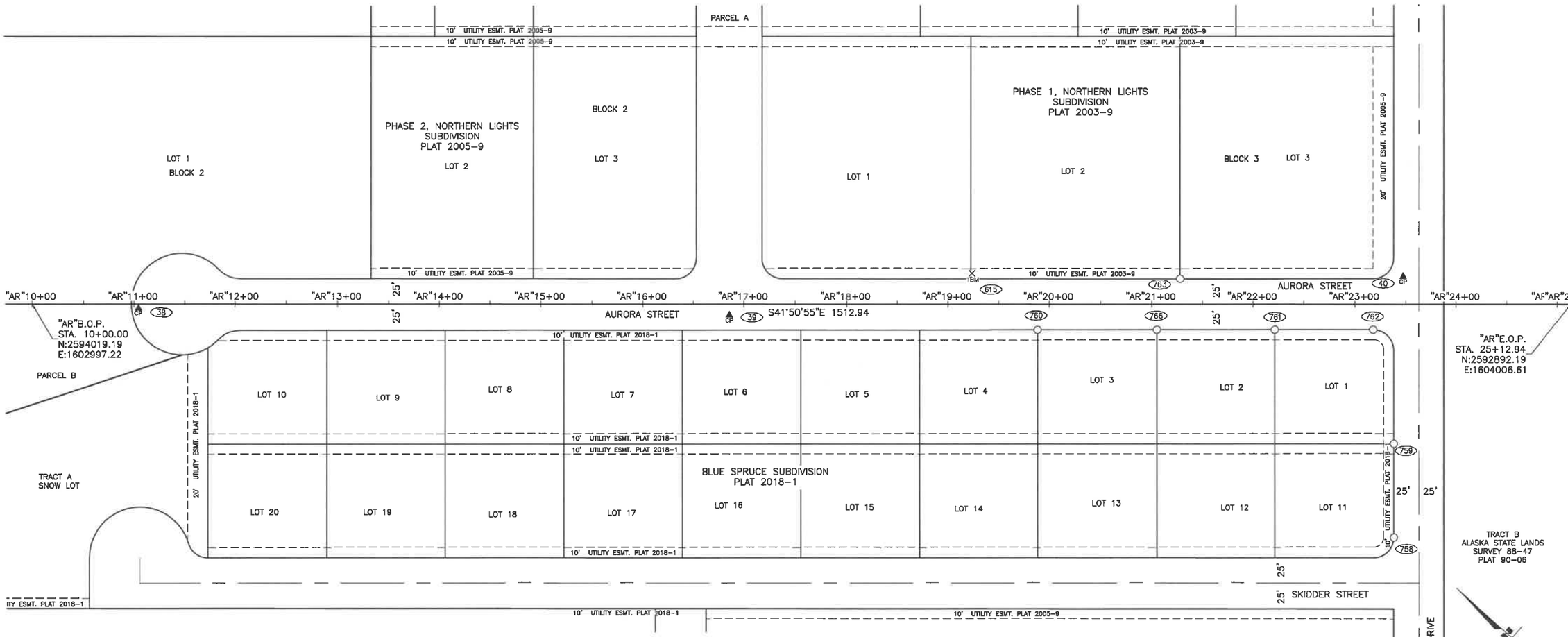

COORDINATE SCHEDULE					
POINT NUMBERS	STATION	OFFSET	NORTHING	EASTING	DESCRIPTION
38	11+04.28	4.11 RT	2593938.7755	1603063.7364	SET 2" ALUMINUM CAP ON 5/8" X 30" REBAR
39	16+85.40	11.10 RT	2593501.2248	1603446.2356	SET 2" ALUMINUM CAP ON 5/8" X 30" REBAR
40	23+46.99	26.90 LT	2593033.7530	1603915.9224	SET 2" ALUMINUM CAP ON 5/8" X 30" REBAR

COORDINATE SCHEDULE					
POINT NUMBERS	STATION	OFFSET	NORTHING	EASTING	DESCRIPTION
760	19+88.43	25.19 RT	2593266.0990	1603637.9094	FOUND YELLOW PLASTIC CAP
766	21+04.98	25.01 RT	2593179.3922	1603715.7987	FOUND YELLOW PLASTIC CAP
763	21+27.84	25.07 LT	2593195.7754	1603768.3546	FOUND 5/8" REBAR
761	22+21.46	25.02 RT	2593092.6242	1603793.5023	FOUND YELLOW PLASTIC CAP
762	23+17.85	24.92 RT	2593020.8865	1603857.8843	FOUND 5/8" REBAR
759	23+38.24	137.28 RT	2592930.7389	1603787.7938	FOUND YELLOW PLASTIC CAP
758	23+38.28	229.60 RT	2592869.1113	1603719.0453	FOUND YELLOW PLASTIC CAP

TBM COORDINATE SCHEDULE						
POINT NUMBERS	STATION	OFFSET	NORTHING	EASTING	ELEVATION	DESCRIPTION
615	19+23.63	29.92 LT	2593351	1603636	33.63	"X" SCRIBED ON SOUTHWEST BOLT OF FIRE HYDRANT

LEGEND

- FOUND PROPERTY CORNER
- CP SET 2" ALCAP ON 5/8"X30" REBAR
- TBM SET PROJECT TBM
- 801 POINT NUMBER, SEE COORDINATE SCHEDULE

0 50 100 Feet

CITY OF VALDEZ, ALASKA — OPPORTUNITIES IN EVERY SEASON

PTS
PROFESSIONAL & TECHNICAL SERVICES, INC.
CONSULTING • ENGINEERING • SURVEYING
912 EAST 15TH AVE, SUITE 200
ANCHORAGE, ALASKA 99501
PHONE:(907) 561-5237
FAX:(907) 563-3813
LICENSE# AECC924

STATE OF ALASKA 49TH STATE — MICHAEL G RUCINSKI LS 14836 — 04-05-2020 — REGISTERED PROFESSIONAL LAND SURVEYOR

CITY OF VALDEZ
PAVEMENT MANAGEMENT PHASE 1

ROBE RIVER

AURORA STREET "AR" BOP TO "AR" EOP

SURVEY CONTROL SHEET

DRAFTED | CHECKED | DESIGNED | A19 | LAYOUT | 2/5/2020 3:53 PM | DATE/TIME | FILE Z:\VP-01\DWG ACTIVE\ROBE RIVER SCS.DWG

NO.	DATE	REVISION

STATE	PROJECT DESIGNATION	YEAR	SHEET NO.	TOTAL SHEETS
ALASKA	19-310-110	2020	B1	B3

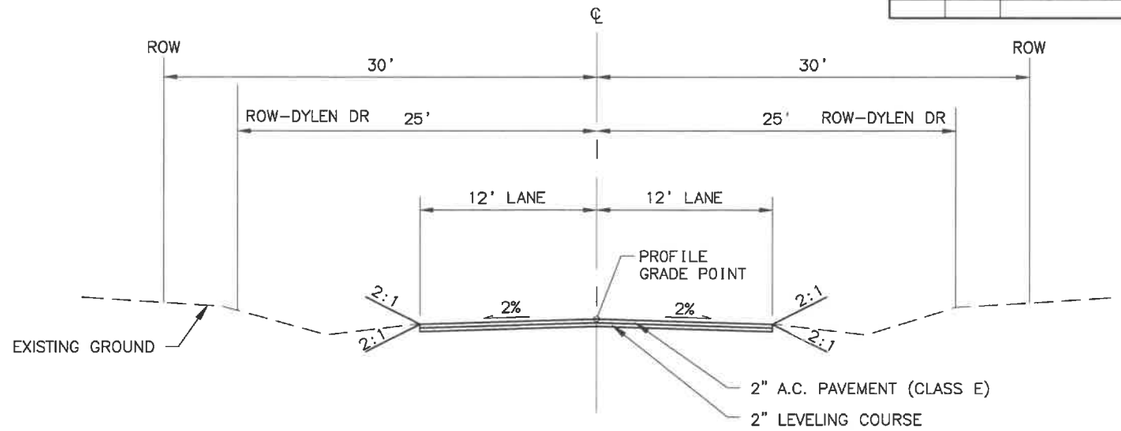

ROBE RIVER SUBDIVISION

NTS

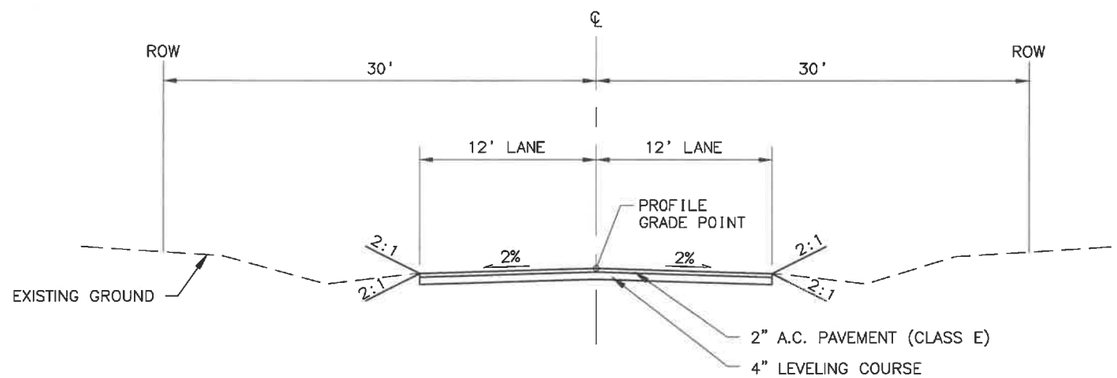

ADD ALT #1

AURORA ST, STA 'AR' 12+20 – STA 'AR' 23+11
BOREALIS ST, STA 'BL' 10+60 – STA 'BL' 19+49

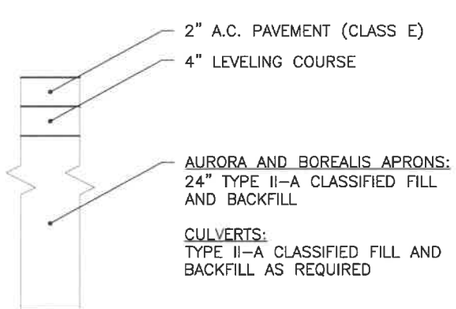

STRUCTURAL SECTION A

AURORA AND BOREALIS PAVED APRONS

NOTES:

1. SCARIFY THE EXISTING ROAD BASE TO A MINIMUM DEPTH OF 6". GRADE AND COMPACT AREAS UNDER NEW ASPHALT TO THE GRADES SHOWN IN THE PLANS. INCORPORATE LEVELING COURSE MATERIAL IF NEEDED.
2. APPLY 4 INCHES TOPSOIL AND SEED TO ALL DISTURBED AREAS OR AS DIRECTED BY THE ENGINEER. DO NOT PLACE TOPSOIL AND SEED SUCH THAT IT INHIBITS FLOW THROUGH CULVERTS. TOPSOIL AND SEEDING IS SUBSIDIARY AND WILL NOT BE MEASURED FOR PAYMENT EXCEPT FOR GROUND DISTURBING WORK SHOWN ON G SHEETS.
3. REMOVE THE FULL DEPTH OF EXISTING ASPHALT.
4. WHEN NEW ASPHALT PAVING MEETS EXISTING ASPHALT, SAWCUT THE FULL DEPTH OF EXISTING ASPHALT TO PROVIDE A SMOOTH VERTICAL FACE. APPLY TACK COAT TO THE EXISTING ASPHALT FACE BEFORE PAVING. THE TRANSITION FROM EXISTING TO NEW ASPHALT SHALL BE UNIFORMLY SMOOTH. SAWCUTTING AND TACK COAT ARE SUBSIDIARY TO OTHER ASPHALT PAVING ITEMS."

PLANS DEVELOPED BY:
KINNEY ENGINEERING, LLC
3909 ARCTIC BLVD, SUITE 400
ANCHORAGE, AK 99503
(907) 346-2373
KINNEY ENGINEERING, LLC
CERT. OF AUTH. NO. AECL 1102

CITY OF VALDEZ, ALASKA
OPPORTUNITIES IN EVERY SEASON

STATE OF ALASKA
49TH
JOSHUA E. CROSS
CE 11222
REGISTERED PROFESSIONAL ENGINEER
4/17/20

CITY OF VALDEZ
PAVEMENT MANAGEMENT PHASE 1
ROBE RIVER SUBDIVISION

TYPICAL SECTIONS

DRAFTED
CHECKED
DESIGNED
B1
LAYOUT
DATE/TIME 4/17/2020 10:13 AM
FILE Z:\PROJECTS\00581 VALDEZ DESIGN SERVICES\DWGS\C-RR\SHEETS\581-RR_B1_BX_TYP-SECT.DWG

NO.	DATE	REVISION	STATE	PROJECT DESIGNATION	YEAR	SHEET NO.	TOTAL SHEETS
			ALASKA	19-310-110	2020	B2	B3

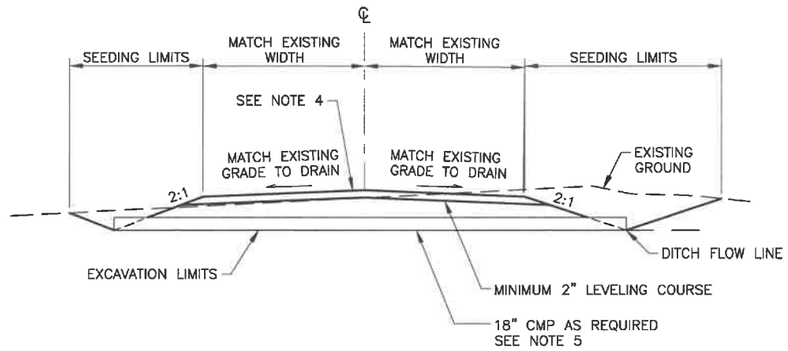

SECTION

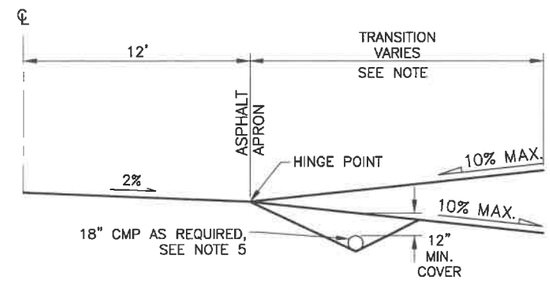

NOTE:

DRIVEWAY EXTENDS TO THE ROW, OR THE CATCH POINT IF LESS THAN 10%, WHICHEVER IS LESS. DRIVEWAY PROFILES MAY BE MODIFIED SUBJECT TO THE ENGINEERS APPROVAL.

DRIVEWAY PROFILE

NTS

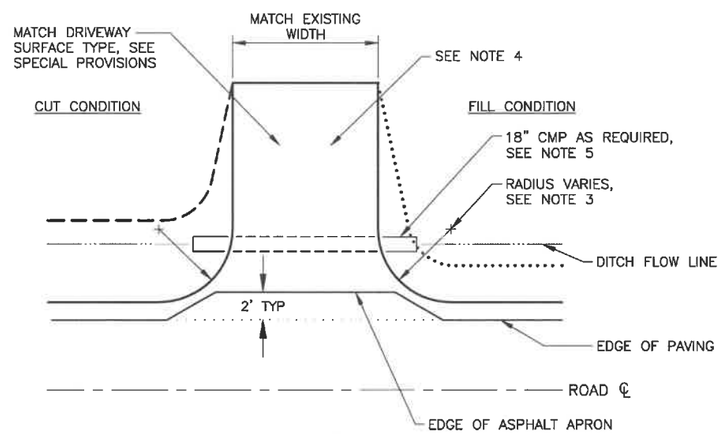

PLAN VIEW

DRIVEWAY PLAN

NTS

DRIVEWAY NOTES:

1. TRANSITION DRIVEWAY GRADE TO FINISHED ASPHALT GRADE WITH LEVELING COURSE MATERIAL.
2. TOPSOIL AND SEED AREAS DISTURBED BY DRIVEWAY AND DRIVEWAY CULVERT CONSTRUCTION. TOPSOIL AND SEEDING REQUIRED FOR DRIVEWAY CONSTRUCTION AND DRIVEWAY CULVERTS IS SUBISIDARY. DO NOT PLACE TOPSIOL AND SEED SUCH THAT IT INHIBITS FLOW THROUGH CULVERS.
3. DRIVEWAY RETURN RADII MAY VARY FROM 0 FT TO 10 FT.
4. SEE SECTION 20.35 OF THE TECHNICAL SPECIFICATIONS FOR DRIVEWAY CONSTRUCTION REQUIREMENTS.
5. SEE SECTION 55.12 OF THE TECHNICAL SPECIFICATIONS FOR DRIVEWAY CULVERT REPLACVEMENT REQUIREMENTS.

PLANS DEVELOPED BY:
KINNEY ENGINEERING, LLC
3909 ARCTIC BLVD, SUITE 400
ANCHORAGE, AK 99503
(907) 346-2373
KINNEY ENGINEERING, LLC
CERT. OF AUTH. NO. AECL 1102

CITY OF VALDEZ, ALASKA • OPPORTUNITIES IN EVERY SEASON •

STATE OF ALASKA 49TH JOSHUA E. CROSS CE 11222 REGISTERED PROFESSIONAL ENGINEER

4/17/20

CITY OF VALDEZ
PAVEMENT MANAGEMENT PHASE 1
ROBE RIVER SUBDIVISION

DRIVEWAY DETAILS

DRAFTED | CHECKED | DESIGNED | B2 | LAYOUT | DATE/TIME 4/17/2020 10:14 AM | FILE Z:\PROJECTS\00581 VALDEZ DESIGN SERVICES\DWGS\C-RR\SHEETS\581-RR_B1_BX_TYP-SECT.DWG

NO.	DATE	REVISION

STATE	PROJECT DESIGNATION	YEAR	SHEET NO.	TOTAL SHEETS
ALASKA	19-310-110	2020	B3	B3

SCHEDULE A – DRIVEWAY REFERENCE

BEGIN STATION	END STATION	OFFSET	REMARKS
'DN'27+53.3	'DN'27+84.7	LT	
'DN'28+10.5	'DN'28+36.1	LT	DRIVEWAY PROJECTED TO EOP
'DN'28+69.6	'DN'28+94.2	RT	DRIVEWAY PROJECTED TO EOP
'DK'09+90.8	'DK'10+06.8	RT	DRIVEWAY PROJECTED TO EOP
'DK'10+17.5	'DK'10+36.3	LT	DRIVEWAY PROJECTED TO EOP
'DK'10+52.2	'DK'10+75.5	RT	DRIVEWAY PROJECTED TO EOP
'DK'11+66.9	'DK'12+06.6	RT	DRIVEWAY PROJECTED TO EOP
'DK'12+04.4	'DK'12+32.9	LT	DRIVEWAY PROJECTED TO EOP
'DK'12+78.6	'DK'12+91.7	LT	DRIVEWAY PROJECTED TO EOP
'DK'12+91.7	'DK'13+00.6	RT	DRIVEWAY PROJECTED TO EOP
'EW'10+48.7	'EW'10+74.7	LT	
'EW'10+76.1	'EW'11+02.6	RT	DRIVEWAY PROJECTED TO EOP
'EW'11+57.5	'EW'11+93.4	RT	DRIVEWAY PROJECTED TO EOP
'EW'12+91.0	'EW'13+32.4	RT	DRIVEWAY PROJECTED TO EOP
'EW'13+37.0	'EW'13+60.4	LT	DRIVEWAY PROJECTED TO EOP
'EW'13+80.4	'EW'14+04.4	LT	END STA APPROXIMATED (NOT IN SURVEY)
'EW'14+31.9	'EW'14+52.8	RT	DRIVEWAY PROJECTED TO EOP
'EW'14+45.1	'EW'14+69.1	LT	BEGIN STA APPROXIMATED (NOT IN SURVEY)
'EW'15+44.6	'EW'15+66.9	RT	DRIVEWAY PROJECTED TO EOP
'EW'15+45.5	'EW'15+82.4	LT	DRIVEWAY PROJECTED TO EOP
'EW'16+09.0	'EW'16+52.4	LT	DRIVEWAY PROJECTED TO EOP
'EW'16+45.4	'EW'16+72.2	RT	DRIVEWAY PROJECTED TO EOP
'EW'17+15.2	'EW'17+57.9	LT	
'EW'17+51.9	'EW'17+80.9	RT	DRIVEWAY PROJECTED TO EOP
'EW'18+81.0	'EW'19+20.6	LT	END STA APPROXIMATED (NOT IN SURVEY)
'EW'18+58.5	'EW'19+46.1	RT	DRIVEWAY PROJECTED TO EOP
'EW'20+86.1	'EW'21+19.7	RT	DRIVEWAY PROJECTED TO EOP
'EW'21+01.0	'EW'21+30.5	LT	
'FC'10+25.2	'FC'10+56.3	LT	DRIVEWAY PROJECTED TO EOP
'FC'10+56.4	'FC'10+75.8	RT	DRIVEWAY PROJECTED TO EOP
'FC'10+91.1	'FC'11+09.1	LT	END STA APPROXIMATED (NOT IN SURVEY)
'FC'11+45.3	'FC'11+63.3	LT	BEGIN STA APPROXIMATED (NOT IN SURVEY)
'FC'11+82.1	'FC'12+07.9	RT	DRIVEWAY PROJECTED TO EOP
'FC'12+07.0	'FC'12+34.6	LT	
'FC'12+74.4	'FC'12+91.7	RT	DRIVEWAY PROJECTED TO EOP
'FC'13+09.6	'FC'13+27.8	RT	DRIVEWAY PROJECTED TO EOP
'FC'13+05.8	'FC'13+23.2	LT	
'FC'13+83.6	'FC'14+16.0	LT	DRIVEWAY PROJECTED TO EOP
'FC'14+27.8	'FC'14+71.2	RT	DRIVEWAY PROJECTED TO EOP
'FC'14+66.2	'FC'15+19.1	LT	DRIVEWAY PROJECTED TO EOP
'FC'15+02.4	'FC'15+19.8	RT	DRIVEWAY PROJECTED TO EOP
'FC'15+53.7	'FC'15+93.2	RT	DRIVEWAY PROJECTED TO EOP
'FC'15+51.1	'FC'15+77.7	LT	DRIVEWAY PROJECTED TO EOP
'FC'16+20.3	'FC'16+43.3	LT	
'FC'16+29.3	'FC'16+75.0	RT	DRIVEWAY PROJECTED TO EOP
'FC'16+87.2	'FC'17+04.9	LT	
'FC'17+44.0	'FC'17+70.6	LT	DRIVEWAY PROJECTED TO EOP
'FC'17+59.8	'FC'17+82.1	RT	DRIVEWAY PROJECTED TO EOP
'FC'18+42.7	'FC'18+65.3	RT	DRIVEWAY PROJECTED TO EOP
'FC'19+34.7	'FC'19+64.8	LT	
'FC'20+14.0	'FC'20+53.1	RT	DRIVEWAY PROJECTED TO EOP
'FC'20+47.4	'FC'20+65.4	LT	END STA APPROXIMATED (NOT IN SURVEY)
'FC'21+08.4	'FC'21+46.8	LT	DRIVEWAY PROJECTED TO EOP
'FC'20+98.1	'FC'21+14.8	RT	DRIVEWAY PROJECTED TO EOP
'FC'21+67.3	'FC'22+33.6	LT	DRIVEWAY PROJECTED TO EOP
'FC'22+81.2	'FC'23+25.3	LT	DRIVEWAY PROJECTED TO EOP
'FC'22+91.9	'FC'23+10.8	RT	DRIVEWAY PROJECTED TO EOP
'FC'23+46.6	'FC'23+61.4	LT	DRIVEWAY PROJECTED TO EOP
'FC'23+45.7	'FC'23+64.8	RT	DRIVEWAY PROJECTED TO EOP
'FC'24+01.5	'FC'24+84.5	LT	DRIVEWAY PROJECTED TO EOP
'FC'24+02.5	'FC'24+38.1	RT	DRIVEWAY PROJECTED TO EOP
'FC'25+19.9	'FC'25+63.3	RT	DRIVEWAY PROJECTED TO EOP
'FC'25+54.6	'FC'25+83.7	LT	DRIVEWAY PROJECTED TO EOP
'FC'26+00.8	'FC'26+31.4	RT	DRIVEWAY PROJECTED TO EOP
'FC'26+39.0	'FC'26+66.2	LT	DRIVEWAY PROJECTED TO EOP
'FC'27+05.0	'FC'27+64.9	RT	DRIVEWAY PROJECTED TO EOP
'FC'27+26.5	'FC'27+78.6	LT	DRIVEWAY PROJECTED TO EOP
'FC'27+85.9	'FC'28+15.1	RT	DRIVEWAY PROJECTED TO EOP
'FC'28+55.0	'FC'28+76.0	LT	END STA APPROXIMATED (NOT IN SURVEY)
'FC'28+71.4	'FC'29+09.5	RT	DRIVEWAY PROJECTED TO EOP
'FC'28+87.3	'FC'29+80.8	LT	BEGIN STA APPROXIMATED (NOT IN SURVEY)

SCHEDULE A – DRIVEWAY REFERENCE

BEGIN STATION	END STATION	OFFSET	REMARKS
'FC'29+17.9	'FC'29+42.5	RT	DRIVEWAY PROJECTED TO EOP
'FC'29+68.0	'FC'30+22.7	RT	DRIVEWAY PROJECTED TO EOP
'FC'30+18.4	'FC'30+39.9	LT	DRIVEWAY PROJECTED TO EOP
'FC'30+45.9	'FC'31+20.8	RT	DRIVEWAY PROJECTED TO EOP
'FC'30+98.4	'FC'31+25.8	LT	DRIVEWAY PROJECTED TO EOP
'FC'31+63.3	'FC'31+80.4	LT	DRIVEWAY PROJECTED TO EOP
'FC'31+71.2	'FC'32+09.5	RT	DRIVEWAY PROJECTED TO EOP
'FC'32+30.0	'FC'32+47.8	LT	DRIVEWAY PROJECTED TO EOP
'FC'32+17.5	'FC'32+50.9	RT	DRIVEWAY PROJECTED TO EOP
'FC'32+66.7	'FC'32+89.7	LT	DRIVEWAY PROJECTED TO EOP
'FC'33+79.6	'FC'34+20.4	LT	DRIVEWAY PROJECTED TO EOP
'FC'33+91.2	'FC'34+25.5	RT	END STA APPROXIMATED (NOT IN SURVEY)
'FC'34+26.8	'FC'34+37.0	RT	BEGIN STA APPROXIMATED (NOT IN SURVEY)
'FC'34+45.4	'FC'34+70.4	LT	DRIVEWAY PROJECTED TO EOP
'FC'34+72.2	'FC'34+86.6	RT	DRIVEWAY PROJECTED TO EOP
'FC'35+35.4	'FC'35+59.0	RT	DRIVEWAY PROJECTED TO EOP
'FC'35+69.1	'FC'35+92.4	LT	DRIVEWAY PROJECTED TO EOP
'FC'36+30.8	'FC'36+71.1	LT	DRIVEWAY PROJECTED TO EOP
'FC'36+54.0	'FC'36+75.7	RT	DRIVEWAY PROJECTED TO EOP
'FC'37+50.7	'FC'37+70.9	LT	DRIVEWAY PROJECTED TO EOP
'FC'37+56.6	'FC'37+85.5	RT	DRIVEWAY PROJECTED TO EOP
'FC'38+26.3	'FC'38+45.5	RT	DRIVEWAY PROJECTED TO EOP
'FC'38+47.3	'FC'38+65.8	LT	DRIVEWAY PROJECTED TO EOP
'FC'38+93.8	'FC'39+58.9	LT	DRIVEWAY PROJECTED TO EOP
'FC'39+35.3	'FC'39+56.6	RT	DRIVEWAY PROJECTED TO EOP
'FC'39+88.8	'FC'40+40.7	RT	DRIVEWAY PROJECTED TO EOP
'FC'40+53.7	'FC'40+97.0	LT	DRIVEWAY PROJECTED TO EOP
'FC'40+93.0	'FC'41+08.1	RT	DRIVEWAY PROJECTED TO EOP
'FC'41+85.1	'FC'42+11.5	RT	DRIVEWAY PROJECTED TO EOP
'FC'41+93.2	'FC'42+35.6	LT	DRIVEWAY PROJECTED TO EOP
'FC'42+42.8	'FC'42+63.6	LT	DRIVEWAY PROJECTED TO EOP
'FC'43+32.3	'FC'43+56.9	LT	DRIVEWAY PROJECTED TO EOP, SPLITS IN 2
'EE'10+83.3	'EE'10+94.4	RT	DRIVEWAY PROJECTED TO EOP, SPLITS IN 2
'EE'10+95.9	'EE'11+17.5	LT	DRIVEWAY PROJECTED TO EOP
'EE'11+45.9	'EE'11+73.9	RT	DRIVEWAY PROJECTED TO EOP
'EE'11+59.6	'EE'11+88.2	LT	END STA APPROXIMATED (NOT IN SURVEY)
'EE'11+91.7	'EE'12+29.6	LT	BEGIN STA APPROXIMATED (NOT IN SURVEY)
'EE'12+12.6	'EE'12+91.9	RT	DRIVEWAY PROJECTED TO EOP
'EE'12+96.3	'EE'13+27.5	LT	DRIVEWAY PROJECTED TO EOP
'EE'13+20.6	'EE'13+40.6	RT	DRIVEWAY PROJECTED TO EOP
'EE'13+81.3	'EE'13+99.9	RT	DRIVEWAY PROJECTED TO EOP
'EE'14+04.4	'EE'14+38.7	LT	
'EE'14+53.9	'EE'14+85.1	RT	DRIVEWAY PROJECTED TO EOP
'EE'14+94.1	'EE'15+24.5	LT	
'EE'15+08.3	'EE'15+27.0	RT	DRIVEWAY PROJECTED TO EOP
'EE'15+76.4	'EE'16+02.0	LT	DRIVEWAY PROJECTED TO EOP
'EE'15+81.5	'EE'16+17.1	RT	DRIVEWAY PROJECTED TO EOP
'EE'16+48.7	'EE'16+78.6	RT	DRIVEWAY PROJECTED TO EOP
'EE'16+82.8	'EE'17+01.6	LT	DRIVEWAY PROJECTED TO EOP
'EE'17+23.9	'EE'17+50.9	RT	DRIVEWAY PROJECTED TO EOP
'EE'17+74.0	'EE'18+06.9	RT	DRIVEWAY PROJECTED TO EOP
'EE'18+02.8	'EE'18+22.5	LT	DRIVEWAY PROJECTED TO EOP
'EE'18+55.8	'EE'18+98.3	LT	DRIVEWAY PROJECTED TO EOP
'EE'18+73.9	'EE'19+06.7	RT	DRIVEWAY PROJECTED TO EOP
'EE'19+75.4	'EE'20+06.4	RT	DRIVEWAY PROJECTED TO EOP
'EE'19+73.4	'EE'20+86.6	LT	DRIVEWAY PROJECTED TO EOP
'EE'20+30.7	'EE'20+67.5	RT	DRIVEWAY PROJECTED TO EOP
'EE'21+18.6	'EE'21+45.3	RT	DRIVEWAY PROJECTED TO EOP
'EE'21+18.1	'EE'21+91.7	LT	DRIVEWAY PROJECTED TO EOP
'EE'21+99.9	'EE'22+33.6	RT	DRIVEWAY PROJECTED TO EOP
'EE'22+26.7	'EE'22+83.0	LT	DRIVEWAY PROJECTED TO EOP
'EE'23+22.4	'EE'23+77.6	RT	DRIVEWAY PROJECTED TO EOP
'EE'23+58.4	'EE'23+91.7	LT	DRIVEWAY PROJECTED TO EOP
'EE'24+50.9	'EE'24+77.7	LT	DRIVEWAY PROJECTED TO EOP
'EE'24+88.6	'EE'24+99.4	LT	DRIVEWAY PROJECTED TO EOP
'EE'25+37.4	'EE'25+59.5	LT	DRIVEWAY PROJECTED TO EOP
'EE'26+42.2	'EE'26+71.9	RT	DRIVEWAY PROJECTED TO EOP
'EE'26+49.0	'EE'26+77.6	LT	DRIVEWAY PROJECTED TO EOP
'EE'27+31.5	'EE'27+58.2	LT	DRIVEWAY PROJECTED TO EOP
'EE'27+72.6	'EE'28+08.7	LT	DRIVEWAY PROJECTED TO EOP
'EE'27+95.5	'EE'28+28.8	RT	DRIVEWAY PROJECTED TO EOP

SCHEDULE A – DRIVEWAY REFERENCE

BEGIN STATION	END STATION	OFFSET	REMARKS
'EE'28+86.0	'EE'29+18.1	LT	DRIVEWAY PROJECTED TO EOP
'EE'29+76.0	'EE'30+03.2	LT	DRIVEWAY PROJECTED TO EOP
'EE'29+91.4	'EE'30+12.0	RT	DRIVEWAY PROJECTED TO EOP
'EE'30+75.6	'EE'31+05.7	LT	DRIVEWAY PROJECTED TO EOP
'EE'30+82.1	'EE'31+02.1	RT	DRIVEWAY APPROXIMATED, IN GE AND SITE PHOTO ONLY
'RR'26+09.8	'RR'26+36.8	RT	DRIVEWAY PROJECTED TO EOP
'RR'26+73.9	'RR'26+88.9	LT	DRIVEWAY PROJECTED TO EOP, ONLY IN BS
'RR'27+20.9	'RR'27+46.7	RT	DRIVEWAY PROJECTED TO EOP
'RR'28+20.3	'RR'28+37.1	RT	DRIVEWAY PROJECTED TO EOP
'RN'09+93.8	'RN'10+05.4	RT	DRIVEWAY PROJECTED TO EOP
'RN'10+37.3	'RN'11+36.4	LT	DRIVEWAY PROJECTED TO EOP
'RN'10+97.6	'RN'11+17.7	RT	DRIVEWAY PROJECTED TO EOP
'RN'11+67.1	'RN'11+92.7	LT	DRIVEWAY PROJECTED TO EOP
'RN'13+45.6	'RN'13+88.3	LT	DRIVEWAY PROJECTED TO EOP
'RN'14+81.3	'RN'14+97.2	LT	DRIVEWAY PROJECTED TO EOP
'RN'15+42.2	'RN'15+68.5	LT	DRIVEWAY PROJECTED TO EOP
'RN'15+90.1	'RN'16+11.1	LT	DRIVEWAY PROJECTED TO EOP
'RN'16+18.5	'RN'16+41.3	RT	DRIVEWAY PROJECTED TO EOP
'RN'16+84.1	'RN'17+16.6	LT	DRIVEWAY PROJECTED TO EOP
'RN'17+68.1	'RN'18+08.2	RT	
'RN'17+85.8	'RN'18+07.3	LT	DRIVEWAY PROJECTED TO EOP
'RN'18+25.3	'RN'18+51.5	RT	
'CB'10+87.9	'CB'11+14.1	LT	DRIVEWAY PROJECTED TO EOP
'CB'11+25.4	'CB'11+54.0	RT	
'CB'11+84.0	'CB'12+00.9	LT	DRIVEWAY PROJECTED TO EOP
'CB'12+54.8	'CB'12+83.9	LT	DRIVEWAY PROJECTED TO EOP
'CB'12+77.6	'CB'13+03.8	RT	
'CB'14+07.6	'CB'14+31.3	RT	
'CB'14+54.6	'CB'14+82.4	LT	DRIVEWAY PROJECTED TO EOP
'CB'14+65.8	'CB'14+89.7	RT	
'CB'15+60.6	'CB'15+79.2	LT	DRIVEWAY PROJECTED TO EOP
'CB'15+91.0	'CB'16+09.9	RT	DRIVEWAY PROJECTED TO EOP
'RB'10+90.4	'RB'11+08.8	RT	DRIVEWAY PROJECTED TO EOP
'RB'11+39.6	'RB'11+62.8	LT	
'RB'11+56.8	'RB'11+94.4	RT	DRIVEWAY PROJECTED TO EOP
'RB'12+42.9	'RB'12+61.5	LT	DRIVEWAY PROJECTED TO EOP
'RB'12+48.3	'RB'12+67.3	RT	DRIVEWAY PROJECTED TO EOP
'RB'12+95.3	'RB'13+17.7	RT	DRIVEWAY PROJECTED TO EOP
'RB'13+60.5	'RB'13+75.0	LT	
'RB'14+00.5	'RB'14+20.1	LT	
'RB'14+48.6	'RB'14+86.2	RT	DRIVEWAY PROJECTED TO EOP
'RB'15+38.5	'RB'15+69.1	LT	
'RB'15+73.9	'RB'16+20.3	RT	END STA APPROXIMATED (NOT IN SURVEY)

NOTE:

1. DRIVEWAY TABLES ARE FOR REFERENCE ONLY. CONTRACTOR TO FIELD VERIFY.

PLANS DEVELOPED BY:
KINNEY ENGINEERING, LLC
3909 ARCTIC BLVD, SUITE 400
ANCHORAGE, AK 99503
(907) 346-2373

KINNEY ENGINEERING, LLC
CERT. OF AUTH. NO. AECL 1102

CITY OF VALDEZ, ALASKA
OPPORTUNITIES IN EVERY SEASON

STATE OF ALASKA
49TH
JOSHUA E. CROSS
CE 11222
REGISTERED PROFESSIONAL ENGINEER
4/17/20

CITY OF VALDEZ
PAVEMENT MANAGEMENT PHASE 1
ROBE RIVER SUBDIVISION

DRIVEWAY REFERENCE TABLES

DRAFTED | CHECKED | DESIGNED | B3 | LAYOUT | DATE/TIME 4/17/2020 10:14 AM | FILE Z:\PROJECTS\00581 VALDEZ DESIGN SERVICES\DWGS\C-RR\SHEETS\581-RR_B3_DRIVEWAY SUMM.DWG

NO.	DATE	REVISION

STATE	PROJECT DESIGNATION	YEAR	SHEET NO.	TOTAL SHEETS
ALASKA	19-310-110	2020	C1	C1

SCHEDULE "A" ESTIMATE OF QUANTITIES

ITEM NO.	SPEC. NO.	WORK DESCRIPTION	UNIT	ESTIMATED QUANTITY
A-1	20.02	CLEARING AND GRUBBING	AC	0.6
A-2	20.04	UNUSABLE EXCAVATION	CY	2,550
A-3	20.06	LEVELING COURSE	TON	3,332
A-4	20.07	TRENCH EXCAVATION AND BACKFILL (VARIOUS DEPTHS)	LF	929
A-5	20.19	REMOVE EXISTING PAVEMENT	SY	25,967
A-6	20.30	STORM WATER POLLUTION PREVENTION PLAN	LS	ALL REQUIRED
A-7	20.35	RECONSTRUCT DRIVEWAY	EA	185
A-8	40.02	A.C. PAVEMENT (CLASS E)	TON	3,069
A-9	55.03	FURNISH AND INSTALL SUBDRAIN WITH GEOTEXTILE (12-INCH CPEP, TYPE SP, GEOTEXTILE TYPE A)	LF	398
A-10	55.11	CONSTRUCT OPEN DITCH	LF	4,828
A-11	55.12	FURNISH AND INSTALL CULVERT (18-INCH, TYPE S CMP, 16 GAGE, CIRCULAR)	LF	531
A-12	55.12	DRIVEWAY CULVERT (18-INCH, TYPE S CMP, 16 GAGE, CIRCULAR)	LF	1,248
A-13	65.02	CONSTRUCTION SURVEY MEASUREMENT	LS	ALL REQUIRED
A-14	70.07	ADJUST MAINLINE VALVE BOX TO FINISH GRADE	EA	10
A-15	70.15	TRAFFIC MAINTENANCE	LS	ALL REQUIRED
A-16	70.16	REMOVE PIPE	LF	433
A-17	75.04	TOP SOIL (AT 4" DEPTH)	MSF	25
A-18	75.05	SEEDING (SCHEDULE D)	MSF	25

SCHEDULE "B" – ADD ALTERNATIVE 1 ESTIMATE OF QUANTITIES

ITEM NO.	SPEC. NO.	WORK DESCRIPTION	UNIT	ESTIMATED QUANTITY
B-1	20.06	LEVELING COURSE	TON	1,591
B-2	20.30	STORM WATER POLLUTION PREVENTION PLAN	LS	ALL REQUIRED
B-3	20.35	RECONSTRUCT DRIVEWAY	EA	24
B-4	40.02	A.C. PAVEMENT (CLASS E)	TON	758
B-5	55.12	DRIVEWAY CULVERT (18-INCH, TYPE S CMP, 16 GAGE, CIRCULAR)	LF	178
B-6	65.02	CONSTRUCTION SURVEY MEASUREMENT	LS	ALL REQUIRED
B-7	70.15	TRAFFIC MAINTENANCE	LS	ALL REQUIRED

TABLE OF ESTIMATING FACTORS

SPEC. NO.	ITEM DESCRIPTION	ESTIMATING FACTOR
20.06	LEVELING COURSE	144 LBS. / CUBIC FOOT
40.02	A.C. PAVEMENT (CLASS E)	151 LBS. / CUBIC FOOT

CITY OF VALDEZ, ALASKA • OPPORTUNITIES IN EVERY SEASON

STATE OF ALASKA 49TH JOSHUA E. CROSS CE 11222 REGISTERED PROFESSIONAL ENGINEER

4/17/20

PLANS DEVELOPED BY:
KINNEY ENGINEERING, LLC
3909 ARCTIC BLVD, SUITE 400
ANCHORAGE, AK 99053
(907) 346-2373

KINNEY ENGINEERING, LLC
CERT. OF AUTH. NO. AECL 1102

CITY OF VALDEZ
PAVEMENT MANAGEMENT PHASE 1
ROBE RIVER SUBDIVISION

ESTIMATE OF QUANTITIES

DRAFTED | CHECKED | DESIGNED | C1 | LAYOUT | DATE/TIME 4/17/2020 10:14 AM | FILE Z:\PROJECTS\00581 VALDEZ DESIGN SERVICES\DWGS\C-RR\SHEETS\581-RR_C1_EQQ.DWG

NO.	DATE	REVISION	STATE	PROJECT DESIGNATION	YEAR	SHEET NO.	TOTAL SHEETS
			ALASKA	19-310-110	2020	D1	D2

SCH A

20.02 CLEARING AND GRUBBING

BEGIN		END		QUANTITY (AC)	REMARKS
STATION	OFFSET	STATION	OFFSET		
'DK'10+73.9	363.9 LT	'DK'11+09.6	12.0 LT	0.6	SNOW LOT CLEARING
ROUNDED TOTAL				0.6	

SCH A

20.07 TRENCH EXCAVATION AND BACKFILL (VARIOUS DEPTHS)

BEGIN		END		QUANTITY (LF)	REMARKS
STATION	OFFSET	STATION	OFFSET		
'DN'17+69.8	21.9 LT	'DN'18+31.9	21.3 LT	62.1	AURORA APRON
'DN'22+65.5	23.1 LT	'DN'23+19.9	24.1 LT	54.4	BOREALIS APRON
'DN'26+14.9	29.0 LT	'DN'26+78.5	27.6 LT	63.5	EAGLE APRON
'EW'11+17.6	20.3 LT	'EW'11+28.7	18.1 RT	40.0	
'DK'10+47.1	18.4 LT	'DK'10+48.1	21.7 RT	40.0	
'DK'10+95.0	21.6 LT	'DK'11+43.4	21.6 LT	48.4	
'FC'21+67.0	22.4 RT	'FC'22+40.2	20.1 RT	73.2	
'EE'24+60.1	18.9 RT	'EE'25+34.8	20.9 RT	74.7	
'RN'14+44.6	20.2 RT	'RN'15+18.5	20.1 RT	74.0	
'DK'10+36.8	22.5 LT	'DK'10+80.0	21.7 LT	43.2	
'DK'10+80.0	21.7 LT	'DK'10+80.0	362.4 LT	340.7	
'DK'10+80.0	21.7 LT	'DK'10+94.0	21.6 LT	14.0	
ROUNDED TOTAL				929.0	

SCH A

20.19 REMOVE EXISTING PAVEMENT

BEGIN		END		QUANTITY (SY)	REMARKS
STATION	OFFSET	STATION	OFFSET		
'EW'10+50.0	LT/RT	'EW'21+48.0	LT/RT	2,909	WEST EAGLE AVE SEGMENT
'DK'10+50.0	LT/RT	'DK'12+50.0	LT/RT	537	DERK WAY SEGMENT
'FC'10+50.0	LT/RT	'FC'43+06.3	LT/RT	8,669	FALCON AVE SEGMENT
'DN'27+01.0	LT/RT	'DN'28+97.0	LT/RT	529	DYLEN DR SEGMENT
'EE'10+52.0	LT/RT	'EE'31+04.3	LT/RT	5,502	EAST EAGLE AVE SEGMENT
'RR'25+82.0	LT/RT	'RR'29+00.0	LT/RT	827	RIVER DR SEGMENT
'RN'10+50.0	LT/RT	'RN'19+08.0	LT/RT	2,311	RAVEN DR SEGMENT
'CB'10+52.0	LT/RT	'CB'16+08.0	LT/RT	1,490	CORBIN LN SEGMENT
'RB'10+50.0	LT/RT	'RB'16+08.0	LT/RT	1,462	ROBE LN SEGMENT
'EW'21+48.0	LT/RT	'EW'21+88.0	LT/RT	194	WEST EAGLE AVE APRON
'EW'10+50.0	LT/RT	'DK'10+50.0	LT/RT	238	WEST EAGLE AVE TO DERK WAY
'DK'12+50.0	LT/RT	'FC'10+50.0	LT/RT	254	DERK WAY TO FALCON AVE
'DN'28+97.0	LT/RT	'DN'29+37.0	LT/RT	169	DYLEN DR APRON
'FC'43+06.3	LT/RT	'RR'29+00.0	LT/RT	283	FALCON AVE TO RIVER DR
'RN'19+08.0	LT/RT	'RN'19+48.0	LT/RT	171	RAVEN DR APRON
'CB'10+12.0	LT/RT	'CB'10+52.0	LT/RT	175	CORBIN LN APRON
'RB'10+50.0	LT/RT	'RN'10+50.0	LT/RT	247	ROBE LN TO RAVEN DR
ROUNDED TOTAL				25,967	

SCH A

55.03 FURNISH AND INSTALL SUBDRAIN WITH GEOTEXTILE (12-INCH CPEP, TYPE SP, GEOTEXTILE TYPE A)

BEGIN		END		QUANTITY (LF)	REMARKS
STATION	OFFSET	STATION	OFFSET		
'DK'10+36.8	22.5 LT	'DK'10+80.0	21.7 LT	43.2	
'DK'10+80.0	21.7 LT	'DK'10+80.0	362.4 LT	340.7	
'DK'10+80.0	21.7 LT	'DK'10+94.0	21.6 LT	14.0	
ROUNDED TOTAL				398	

SCH A

55.12 FURNISH AND INSTALL CULVERT (18-INCH, TYPE S CMP, 16 GAGE, CIRCULAR)

BEGIN		END		QUANTITY (LF)	REMARKS
STATION	OFFSET	STATION	OFFSET		
'DN'17+69.8	21.9 LT	'DN'18+31.9	21.3 LT	62.1	AURORA APRON
'DN'22+65.5	23.1 LT	'DN'23+19.9	24.1 LT	54.4	BOREALIS APRON
'DN'26+14.9	29.0 LT	'DN'26+78.5	27.6 LT	63.5	EAGLE APRON
'EW'11+17.6	20.3 LT	'EW'11+28.7	18.1 RT	40.0	
'DK'10+47.1	18.4 LT	'DK'10+48.1	21.7 RT	40.0	
'DK'10+95.0	21.6 LT	'DK'11+43.4	21.6 LT	48.4	
'FC'21+67.0	22.4 RT	'FC'22+40.2	20.1 RT	73.2	
'EE'24+60.1	18.9 RT	'EE'25+34.8	20.9 RT	74.7	
'RN'14+44.6	20.2 RT	'RN'15+18.5	20.1 RT	74.0	
ROUNDED TOTAL				531	

DRAFTED | CHECKED | DESIGNED | D1 | LAYOUT | 4/17/2020 10:14 AM | DATE/TIME

FILE Z:\PROJECTS\00581 VALDEZ DESIGN SERVICES\DWGS\C-RR\SHEETS\581-RR_D1_DX_SUMMARY.DWG

PLANS DEVELOPED BY:
KINNEY ENGINEERING, LLC
3909 ARCTIC BLVD, SUITE 400
ANCHORAGE, AK 99503
(907) 348-2373
KINNEY ENGINEERING, LLC
CERT. OF AUTH. NO. AECL 1102

CITY OF VALDEZ, ALASKA
OPPORTUNITIES IN EVERY SEASON

STATE OF ALASKA
49TH
JOSHUA E. CROSS
CE 11222
REGISTERED PROFESSIONAL ENGINEER
4/17/20

CITY OF VALDEZ
PAVEMENT MANAGEMENT PHASE 1
ROBE RIVER SUBDIVISION

SUMMARY TABLES

NO.	DATE	REVISION

STATE	PROJECT DESIGNATION	YEAR	SHEET NO.	TOTAL SHEETS
ALASKA	19-310-110	2020	D2	D2

SCH A

70.07 ADJUST MAINLINE VALVE BOX TO FINISH GRADE

STATION	OFFSET	QUANTITY (EA)	REMARKS
'DN'29+21.3	25.5 RT	1	DN-FC INTERSECTION
'FC'22+23.3	24.9 RT	1	DN-FC INTERSECTION
'FC'22+28.1	24.4 RT	1	DN-FC INTERSECTION
'EW'21+67.9	20.7 RT	1	EW-DN INTERSECTION
'RN'19+30.1	25.4 RT	1	RN-EE INTERSECTION
'EE'25+16.7	24.9 RT	1	RN-EE INTERSECTION
'EE'25+26.0	25.3 RT	1	RN-EE INTERSECTION
'CB'10+27.2	25.8 RT	1	CB-RN INTERSECTION
'RN'14+51.4	24.9 RT	1	CB-RN INTERSECTION
TOTAL		1	CB-RN INTERSECTION
	TOTAL	10	

SCH A

70.16 REMOVE PIPE

BEGIN		END		QUANTITY (LF)	REMARKS
STATION	OFFSET	STATION	OFFSET		
'DN'17+73.3	21.8 LT	'DN'18+26.4	21.4 LT	53.1	
'DN'22+65.6	23.1 LT	'DN'23+19.8	24.1 LT	54.3	
'EW'11+19.1	15.2 LT	'EW'11+28.0	15.9 RT	32.4	
'DK'10+49.5	17.3 LT	'DK'10+50.0	17.8 RT	35.0	
'DK'10+75.6	21.6 LT	'DK'11+35.3	21.6 LT	59.8	
'FC'21+69.8	22.3 RT	'FC'22+28.1	24.4 RT	69.8	
'EE'24+64.8	19.0 RT	'EE'25+29.2	20.8 RT	64.5	
'RN'14+49.4	20.2 RT	'RN'15+13.0	20.1 RT	63.6	
ROUNDED TOTAL				433	

SCH A

75.04 TOP SOIL (AT 4" DEPTH)

BEGIN		END		QUANTITY (MSF)	REMARKS
STATION	OFFSET	STATION	OFFSET		
'DK'10+73.9	363.9 LT	'DK'11+09.7	12.0 LT	24.7	
'RB'10+26.3	38.6 LT	'RB'10+53.9	21.9 LT	0.2	
ROUNDED TOTAL				25.0	

SCH A

75.05 SEEDING (SCHEDULE D)

BEGIN		END		QUANTITY (MSF)	REMARKS
STATION	OFFSET	STATION	OFFSET		
'DK'10+73.9	363.9 LT	'DK'11+09.7	12.0 LT	24.7	
'RB'10+26.3	38.6 LT	'RB'10+53.9	21.9 LT	0.2	
ROUNDED TOTAL				25.0	

PLANS DEVELOPED BY:
KINNEY ENGINEERING, LLC
3909 ARCTIC BLVD, SUITE 400
ANCHORAGE, AK 99503
(907) 346-2373

KINNEY ENGINEERING, LLC
CERT. OF AUTH. NO. AECL 1102

CITY OF VALDEZ, ALASKA
OPPORTUNITIES IN EVERY SEASON

STATE OF ALASKA
49 TH
JOSHUA E. CROSS
CE 11222
REGISTERED PROFESSIONAL ENGINEER
4/17/20

CITY OF VALDEZ
PAVEMENT MANAGEMENT PHASE 1
ROBE RIVER SUBDIVISION

SUMMARY TABLES

DRAFTED | CHECKED | DESIGNED | D2 | LAYOUT | DATE/TIME 4/17/2020 10:14 AM | FILE Z:\PROJECTS\00581 VALDEZ DESIGN SERVICES\DWGS\C-RR\SHEETS\581-RR_D1_DX_SUMMARY.DWG