FEE: $50.00
SITE PLAN
(WAIVED 2013 PER RESOLUTION #12-72)

CITY OF VALDEZ

APPLICATION FOR CONDITIONAL USE PERMIT

APPLICATION NUMBER	DATE Aug 8, 2019
NAME OF APPLICANT	Valdez Petroleum Terminal
ADDRESS OF APPLICANT	402 W. Egan
	Valdez, AK
DAYTIME PHONE	(907) 835-4207
SIGNATURE	Josh V. Lewis
LEGAL OWNER	Petro Star Inc
ADDRESS	3900 C Street, Suite 802
	Anchorage, AK 99503
PHONE NUMBER	(907) 339-6630 direct
STREET ADDRESS:	
LEGAL DESCRIPTION:	Tract 1, Port Valdez Subdivision
CURRENT ZONING	Light Industrial
PROVISIONS OF ZONING ORDINANCE REQUIRING A VARIANCE (I.E. SETBACK, LOT COVERAGE, ETC.)	
Fuel Storage tank farm & transfer facility	
USE REQUESTED	Vapor Control @ truck rack
TEMPORARY	HOW LONG
PERMANENT X	

Please answer the following questions:

How will the proposed use conform to the present and future development of the area? What will be its effect on present and future development?

Existing fuel storage & transfer facility

Why is there a need in the area for the Conditional Use requested? Wherever possible, substantiate this statement with factual data.

Install Vapor Combustion Unit (VCU) to control VOC emissions @ existing truck rack for gasoline loading

Why is this site especially suited to the Conditional Use proposed?

Existing tank farm & truck rack

Why would the Conditional Use have no detrimental effects on surrounding property and uses?

Installation of vapor combustion unit @ existing truck rack for gasoline loading

Attach or include any other information you feel is relevant to this application

See attached project description and site map

Project Description

The objective of this project is installation of a Vapor Combustion Unit (VCU) and associated equipment at the Valdez Petroleum Terminal (VPT) located at 402 Egan Avenue in Valdez, Alaska. The VCU will allow the VPT to incinerate vapors when filling trucks at the existing truck loading rack. The trucks will connect to the vapor pipeline that will extend to the VCU. Controls will not allow filling of the trucks until the VCU is fully operational and all other permissive(s) have been met. The VCU will lower the overall emissions for the terminal.

The VCU is designed and provided by John Zink (JZ). The VCU installation addition will be supplied with the following items and details:

- Vapor Piping supported and routed from the Truck Rack to the VCU Inlet to the existing tie-in point.
- Support slab for VCU Piping Skid and Foundation for VCU Stack and blower.
- 500-gallon Propane Tank Support Slab and Protection.
- Electrical Power and Controls for VCU and tie-in to the existing Accuload Truck Rack Controls.

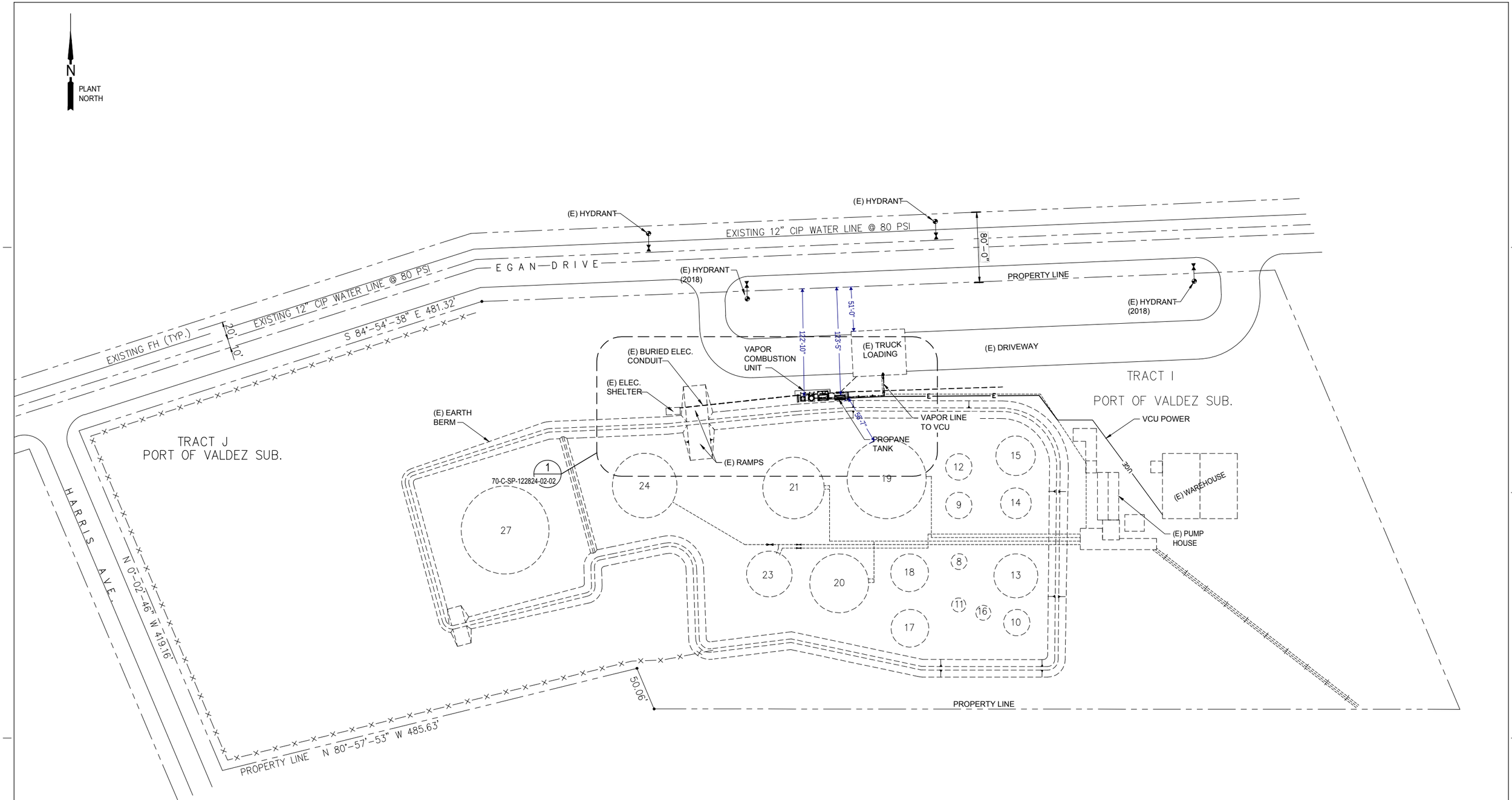

REFERENCE DRAWINGS	
DRAWING	DRAWING TITLE
70-C-SP-122824-02-01	Civil - Site Plan, Overall
70-C-SP-122824-02-01	Civil/Structural - Site Plan, VCU-6900, V-6919 & Truck Rack Areas

REVISIONS				
REV.	DATE	BY	APP'D.	DESCRIPTION
0	9/16/19	LS	LL	Added Dimensions to Site Plan for Permit

SCALE	1" = 50'	MO	DAY	YR
DRAWN				
CHK'D				
APP'D				
APP'D				
APPROVED				
DATE				
PROJECT				

PETRO STAR
VALDEZ PETROLEUM TERMINAL

VPT INFRASTRUCTURE - VCU PROJECT
CIVIL - SITE PLAN
OVERALL FACILITY

DRAWING NUMBER 70-C-SP-122824-02-03 REV. 0

U:\2019 Jobs\309090 VPT Infrastructure Project - VCU - Petrostar\DIR-4\Civil-Structural\70-C-SP-122824-02-01.dwg, 9/6/2019 1:47:36 PM

VPT EQUIPMENT MINIMUM OFFSETS AND CLEARANCES				
TYPE OF EQUIPMENT	NOTE	MIN. SPACING FROM EQUIPMENT ON SITE	VALUE	REF
VAPOR COMBUSTION UNIT (VCU)	1	500 WG LP VESSEL	25 FEET	IFC CHAPTER 57 AND SECTION 5706.5.1.10.4
	2	NEAREST BUILDING OF IMPORTANCE	25 FEET	
	3	PROPERTY LINE	25 FEET	
500 WG PROPANE VESSEL	4	TO VCU	25 FEET	NFPA 58 TABLE 6.3.1.1
	5	NEAREST BUILDING OF IMPORTANCE	10 FEET	
	6	PROPERTY LINE	10 FEET	
BULK FUEL STORAGE TANK	7	TO VCU	50 FEET	OWNER SPECIFIED

SHEET NOTES:

1. INSTALL PIPE BOLLARDS IN ACCORDANCE WITH IFC 2012, SECTIONS 312, VEHICLE IMPACT PROTECTION.
2. CARE MUST BE TAKEN WHILE EXCAVATING NEAR THE EARTH BERM AS TO AVOID RUPTURE OF THE ELECTRICAL CONDUIT AND THE LIQUID CONTAINMENT BARRIER.
3. PRIOR TO DRILLING FOR BOLLARDS OR SUPPORT PIERS VERIFY LOCATIONS OF ALL UNDERGROUND UTILITIES.

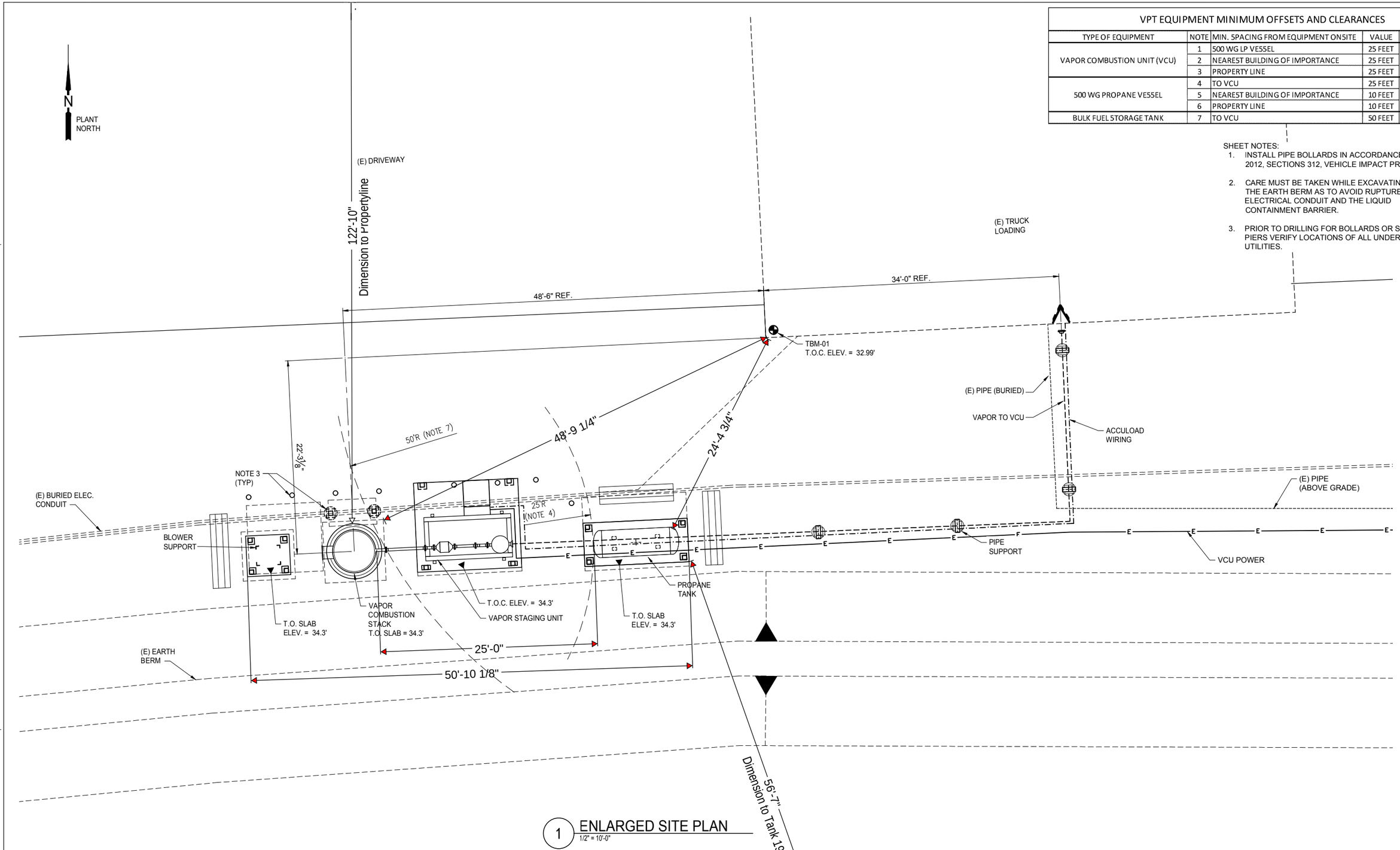

1 ENLARGED SITE PLAN
1/2" = 10'-0"

REFERENCE DRAWINGS	
DRAWING	DRAWING TITLE
70-C-SP-122824-02-01	Civil - Site Plan, Overall
70-C-SP-122824-02-01	Civil/Structural - Site Plan, VCU-6900, V-6919 & Truck Rack Areas

REVISIONS				
REV.	DATE	BY	APP'D.	DESCRIPTION
0	9/16/19	LS	LL	Added Dimensions to Site Plan for Permit

SCALE	1" = 10'	MO	DAY	YR
DRAWN				
CHK'D				
APP'D				
APP'D				
APPROVED				
DATE				
PROJECT				

PETRO STAR
VALDEZ PETROLEUM TERMINAL

VPT INFRASTRUCTURE - VCU PROJECT
CIVIL - SITE PLAN
VCU-6900, V-6919, & TRUCK RACK

DRAWING NUMBER 70-C-SP-122824-02-04 REV. 0

U:\2019 Jobs\309090 VPT Infrastructure Project - VCU - Petrostar\DIR-4\Civil-Structural\70-C-SP-122824-02-02.dwg, 9/6/2019 1:47:38 PM

THE STATE of ALASKA
GOVERNOR MICHAEL J. DUNLEAVY

Department of Public Safety
DIVISION OF FIRE AND LIFE SAFETY
Plan Review Bureau - Anchorage
5700 East Tudor Road
Anchorage, Alaska 99507-1225
Main: 907.269.2004
Fax: 907.269.0098

November 07, 2019

Lisa Lewis
Petro Star Inc
3900 C Street Suite 802
Anchorage, AK 99503

SUBJECT:	Petro Star Tank Farm - Fuel System Project
CITY:	Valdez
PLAN REVIEW:	2019Anch1770
OCCUPANCY:	Tank

2012 INTERNATIONAL BUILDING AND FIRE CODE

Dear Lisa Lewis:

Plans for the Fuel System Project have been reviewed by this office for conformity with the State Fire Safety Regulations and are hereby approved. Enclosed is a certificate of approval that must be posted on the premises until the project has been completed according to the approved plans and all regulations have been adhered to.

Approval of submitted plans is not approval of omissions or oversights by this office or noncompliance with any applicable regulations of the Municipal Government.

It must be understood that the inclusion of and compliance with State Fire Safety Regulations does not preclude the necessity of compliance with the requirements of local codes and ordinances.

If we can be of further assistance in this matter, please feel free to contact us at the address above.

Sincerely,

Sean Armstrong
Fire Protection Specialist

Enclosure: Approval Certificate

State of Alaska
Office of the State Fire Marshal
Plan Review

This is to certify that the plans for this building were reviewed by the *State Fire Marshal* on November 07, 2019 for conformance with AS 18.70.010 -- 100; 13 AAC 50.027.

This certificate shall be posted in a conspicuous place on the premises named Petro Star Tank Farm and shall remain posted until construction is completed.

NOTICE: Any changes or modifications to the approved plans **must** be resubmitted for review by the *State Fire Marshal*.

Plan Review #: **2019Anch1770** By: _____

Sean Armstrong
Fire Protection Specialist

Authority: AS 18.70.080
Form: 12-741
(6/01)

Fuel System Project ONLY

PETRO STAR INC.

VALDEZ PETROLEUM TERMINAL
VPT INFRASTRUCTURE - VCU PROJECT

VALDEZ, ALASKA
SEPTEMBER 12, 2019

ISSUED FOR CONSTRUCTION

CIVIL / STRUCTURAL

GREAT NORTHERN ENGINEERING

CONSULTING ENGINEERS
137 E. ARCTIC
PALMER, AK 99645
(907) 745-6988

GNE PROJECT #309090

DWG.	REVISION	DATE	DESCRIPTION
70-CS-CV-122824-02-00		09/06/19	CIVIL/STRUCTURAL - COVER
70-CS-IND-122824-02-00	2	09/17/19	CIVIL/STRUCTURAL - DRAWING INDEX
70-C-GN-122824-02-01	0	09/06/19	CIVIL - GENERAL NOTES
70-S-GN-122824-02-02	0	09/06/19	STRUCTURAL - GENERAL NOTES
70-S-GN-122824-02-03	1	09/12/19	STRUCTURAL - GENERAL NOTES
70-C-SP-122824-02-01	1	09/12/19	CIVIL - SITE PLAN
70-CS-SP-122824-02-02	2	09/17/19	CIVIL/STRUCTURAL - SITE PLAN - VCU-6900, V-6919 & TRUCK RACK AREAS
70-C-SDP-122824-02-01	1	09/12/19	CIVIL - SITE DRAINAGE PLAN - VCU-6900, V-6919 & TRUCK RACK AREAS
70-CS-PVW-0691-01	1	09/12/19	CIVIL/STRUCTURAL - PLAN VIEW - VCU-6900 FOUNDATIONS
70-CS-SED-0691-02	1	09/12/19	CIVIL/STRUCTURAL - SECTIONS - VCU-6900 FOUNDATIONS
70-CS-PVW-0692-01	1	09/12/19	CIVIL/STRUCTURAL - PLAN VIEW - V-6919 FOUNDATION
70-S-PVW-0693-01	0	09/06/19	STRUCTURAL - PLAN VIEW - PIPE SUPPORTS
70-S-SED-0693-02	0	09/06/19	STRUCTURAL - SECTIONS & DETAILS - PIPE SUPPORTS
70-CS-STDD-0694-01	1	09/12/19	CIVIL/STRUCTURAL - STANDARD DETAILS - VCU-6900, V-6919 & TRUCK RACK AREAS
70-S-PVW-0695-01	0	09/06/19	STRUCTURAL - PLAN VIEW - VCU-6900 & V-6919 SNOW PROTECTION
70-S-PVW-0695-02	0	09/06/19	STRUCTURAL - PLAN VIEW - VCU-6900 SNOW PROTECTION
70-S-SED-0695-03	0	09/06/19	STRUCTURAL - PLAN VIEW - VAPOR LINE SNOW PROTECTION
70-S-SED-0695-04	1	09/12/19	STRUCTURAL - SECTIONS AND DETAILS - VCU-6900 & V-6919 SNOW PROTECTION
70-S-SED-0695-05	0	09/06/19	STRUCTURAL - SECTIONS AND DETAILS - VCU-6900 SNOW PROTECTION

REFERENCE DRAWINGS

DRAWING	DRAWING TITLE

STATE OF ALASKA
49 TH
Andrew P. Adams
No. SE13603
REGISTERED PROFESSIONAL ENGINEER
9/17/19

GREAT NORTHERN ENGINEERING
137 E. ARCTIC, SUITE 101
PALMER, AK 99645
(907) 745-6988
GNE # 309090

REVISIONS

REV.	DATE	BY	APP'D.	DESCRIPTION
0	09/06/19	JM	AA	ISSUED FOR CONSTRUCTION
1	09/12/19	JM	AA	ISSUED FOR CONSTRUCTION
2	09/17/19	WDC	AA	ISSUED FOR CONSTRUCTION

		MO	DAY	YR
SCALE				
DRAWN	J. MCCLAIN	08	06	19
CHK'D				
APP'D				
APP'D				
APPROVED				
DATE				
PROJECT				

PETRO STAR
VALDEZ PETROLEUM TERMINAL

VPT INFRASTRUCTURE - VCU PROJECT
CIVIL/STRUCTURAL - DRAWING INDEX

DRAWING NUMBER 70-CS-IND-122824-02-00 REV. 2

U:\2019 Jobs\309090 VPT Infrastructure Project - VCU - Petrostar\DIR-5\Civil-Structural\70-CS-IND-122824-02-00.dwg, 70-CS-IND-122824-02-00, 9/17/2019 5:07:28 PM

GENERAL CIVIL NOTES:

SURVEYS

1. ALL CONSTRUCTION SURVEYS SHALL BE PERFORMED BY OR UNDER THE SUPERVISION OF A SURVEYOR LICENSED IN THE STATE OF ALASKA.

2. AN ACCURATE METHOD OF HORIZONTAL CONTROL SHALL BE ESTABLISHED BY THE CONTRACTOR AND APPROVED BY THE ENGINEER BEFORE CONSTRUCTION BEGINS. THE CONTRACTOR SHALL MAINTAIN THE CONTROL SYSTEM THROUGHOUT THE PROJECT. IF AT ANY TIME THE METHODS UTILIZED FAIL TO PROVIDE ACCURATE LOCATION THE CONTRACTOR MAY BE REQUIRED TO SUSPEND WORK. THE CONTRACTOR SHALL LAY OUT THE WORK FROM THE OWNER ESTABLISHED VERTICAL CONTROL POINTS AND CONTRACTOR ESTABLISHED HORIZONTAL CONTROL POINTS AND SHALL BE RESPONSIBLE FOR ALL REQUIRED MEASUREMENTS TAKEN FROM THESE POINTS.

3. THE CONTRACTOR SHALL SUPPLY ALL STAKES, RANGE MARKERS, EQUIPMENT AND LABOR AS REQUIRED TO LAYOUT THE WORK FROM CONTROL POINTS AT THE CONTRACTORS EXPENSE. IT SHALL BE THE CONTRACTOR'S RESPONSIBILITY TO MAINTAIN ALL THE CONTROL POINTS UNTIL AUTHORIZED TO REMOVE THEM. IF SUCH POINTS ARE DESTROYED OR DISTURBED THEY SHALL BE RE-ESTABLISHED BY THE CONTRACTOR AT THE CONTRACTOR'S EXPENSE.

UTILITY LOCATE

1. CONTRACTOR IS RESPONSIBLE FOR LOCATING ALL UTILITIES PRIOR TO STARTING ANY SITE WORK. USE CAUTION WHEN WORKING AROUND OVERHEAD AND UNDERGROUND UTILITIES.

SITE PREPARATION

1. STOCKPILING OF USABLE MATERIAL MUST TAKE PLACE IN THE WORK LIMITS OR IN THE CONTRACTOR'S STAGING AREA. USABLE EXCAVATION THAT HAS BEEN STOCKPILED ON-SITE SHALL BE COVERED TO PREVENT MOISTURE INFILTRATION UNTIL SUCH TIME AS THE MATERIAL IS REQUIRED FOR RE-USE. IF ALL OF THE USABLE MATERIAL IS NOT RE-USED THE CONTRACTOR SHALL BE RESPONSIBLE FOR THE REMOVAL AND DISPOSAL OF ALL EXCESS USABLE MATERIAL FROM THE PROJECT SITE.

2. ALL COSTS ASSOCIATED WITH THE REMOVAL, TRANSPORT AND DISPOSAL OF EXCESS SITE MATERIALS SHALL BE THE CONTRACTOR'S RESPONSIBILITY.

EXCAVATION

1. KEEP EXCAVATION AREAS FREE FROM WATER BY DE-WATERING AS NECESSARY. DE-WATERING SYSTEM DISCHARGE SHALL BE IN COMPLIANCE WITH STATE AND FEDERAL CODES.

BACKFILL AND COMPACTION

1. THE PROJECT ENGINEER WILL INSPECT AND APPROVE ALL EXCAVATIONS PRIOR TO PLACEMENT OF ANY FILL. IN NO CASE SHALL FILL BE PLACED ON SOIL OR SUB-GRADE THAT IS FROZEN, CONTAINS FROST, OR IS COVERED BY SNOW WITHOUT THE PRIOR APPROVAL OF THE OWNER REPRESENTATIVE. WHEN SUCH CONDITIONS EXIST, THE CONTRACTOR SHALL REMOVE THE AFFECTED SOIL OR SUB-GRADE PRIOR TO PLACING FILL.

2. WITH APPROVAL FROM THE OWNER REPRESENTATIVE, THE EXISTING SITE MATERIAL MAY BE SUITABLE FOR RE-USE. HAVING MET REQUIRED EARTHWORK SPECIFICATIONS PRIOR TO IT'S ORIGINAL PLACEMENT, THE MATERIAL SHALL NOT REQUIRE FURTHER LAB ANALYSIS OR RE-GRADING.

3. CONSTRUCT THE EMBANKMENT(S) WITH CLASSIFIED FILL TO THE CONTOURS, ELEVATIONS, AND DIMENSIONS SHOWN ON THE DRAWINGS.

4. COMPACT ALL SUB-GRADE SOILS TO 95% DENSITY.

5. PLACE CLASSIFIED AND UNCLASSIFIED FILL/BACKFILL IN 12-INCH LOOSE LIFTS (MAXIMUM), AT A MOISTURE CONDITION LESS THAN OPTIMUM. IN EXTREMELY RAINY WEATHER, PROTECT FILL AND BACKFILL MATERIALS TO AVOID ABOVE -OPTIMUM MOISTURE CONTACT PRIOR TO COMPACTION. COMPACT EACH LIFT BEFORE PLACING OVERLAYING LIFTS. DO NOT DUMP CLASSIFIED FILL IN LARGE PILES, WHICH REQUIRE EXTENSIVE RE-HANDLING. TAKE CARE TO AVOID SEGREGATION OR POCKETS OF FINE OR COARSE MATERIAL.

6. THE DEGREE OF COMPACTION FOR CLASSIFIED FILL/BACKFILL SHALL BE A MINIMUM OF 98% MAXIMUM DENSITY, OBTAINED WITH HEAVY VIBRATORY COMPACTORS. WET, OR DRY BY AERATION, FILL/BACKFILL TO THE MOISTURE CONTENT REQUIRED TO ATTAIN THE SPECIFIED DEGREE OF COMPACTION

CONTRACTOR TESTING REQUIREMENTS

1. CONTRACTOR TO PROVIDE SOIL SIEVE SIZE TEST RESULTS FOR EACH OF THE FILL TYPES NOTED. NO MATERIAL SHALL BE DELIVERED TO THE SITE PRIOR TO VERIFICATION OF SATISFACTORY COMPLIANCE WITH THE NOTED REQUIREMENTS.

2. CONTRACTOR SHALL PROVIDE MOISTURE-DENSITY TESTING IN ACCORDANCE WITH AASHTO T-180 METHOD D, OR FOLLOWING ATM T-12.

3. CONTRACTOR SHALL PROVIDE COMPACTION TEST RESULTS VERIFYING EACH OF THE DIFFERENT BACKFILL TYPES HAVE BEEN COMPACTED TO A MINIMUM OF 98% PER AASHTO T-180 OR ATM T-12 FOR MAXIMUM DENSITY.

CONCRETE REQUIREMENTS

1. SEE STRUCTURAL SHEET 70-CS-GN-122824-02-03 FOR CONCRETE SPECIFICATIONS AND REQUIREMENTS.

REFERENCE DRAWINGS

DRAWING	DRAWING TITLE

STATE OF ALASKA 49TH Andrew P. Adams No. SE13603 REGISTERED PROFESSIONAL ENGINEER
9/12/19

GREAT NORTHERN ENGINEERING
137 E. ARCTIC, SUITE 101
PALMER, AK 99645
(907) 745-6988
GNE # 309090

REVISIONS

REV.	DATE	BY	APP'D.	DESCRIPTION
0	09/06/19	JM	AA	ISSUED FOR CONSTRUCTION

		MO	DAY	YR
SCALE				
DRAWN	J. MCCLAIN	08	07	19
CHK'D				
APP'D				
APP'D				
APPROVED				
DATE				
PROJECT				

PETRO STAR
VALDEZ PETROLEUM TERMINAL

VPT INFRASTRUCTURE - VCU PROJECT
CIVIL - GENERAL NOTES

DRAWING NUMBER 70-CS-GN-122824-02-01 REV. 0

GENERAL STRUCTURAL NOTES:

BASIS OF DESIGN:

1. BUILDING CODE: 2012 INTERNATIONAL BUILDING CODE (IBC)

2. RISK CATEGORY: II

3. WIND LOAD: 120 MPH, 3-SECOND GUST ULTIMATE DESIGN WIND SPEED
EXPOSURE C
INTERNAL PRESSURE COEFFICIENT, GCpi=+/-0.18

4. GROUND SNOW LOAD: 160 PSF

5. FLOOD LOAD: N/A

6. SPECIAL LOADS: N/A

7. SEISMIC DESIGN CRITERIA
MAPPED SPECTRAL RESPONSE ACCELERATIONS: Ss=1.50, S1=0.77
SPECTRAL RESPONSE COEFFICIENTS: Sds=1.00, Sd1=0.77
SITE CLASS= D
SEISMIC DESIGN CATEGORY = D
ANALYSIS PROCEDURE: SIMPLIFIED ANALYSIS PROCEDURE

SPECIAL CONDITIONS, REQUIREMENTS AND NOTES TO OWNER, AND CONTRACTORS:

CONTRACTOR, BUILDER AND SUBCONTRACTORS INVOLVED IN ANY FORM OF CONSTRUCTION USING THESE DOCUMENTS SHALL INFORM THE OWNER AND DEVELOPER IN WRITING PRIOR TO CONSTRUCTION OF THE FOLLOWING RESPONSIBILITIES, PERFORMANCE CRITERIA AND LIMITATIONS AND RISKS ASSOCIATED WITH CONSTRUCTION. IF THE OWNER, DEVELOPER OR CONTRACTOR IS NOT ABLE TO ACCEPT RESPONSIBILITIES OR PERFORMANCE CRITERIA AND LIMITATIONS, NOTIFY OUR OFFICE PRIOR TO START OF CONSTRUCTION. IT SHALL BE EXPRESSLY UNDERSTOOD THAT THE ENGINEER IS NOT RESPONSIBLE OR LIABLE FOR THE LACK OF PERFORMANCE OF MATERIALS, SYSTEMS OR DESIGNS NOT BEING LIMITED TO ITEMS OUTLINED BELOW. CONTRACTORS AND SUBCONTRACTORS SHALL THOROUGHLY REVIEW ALL CONDITIONS AND RESPONSIBILITIES STATED IN THESE NOTES, GENERAL STRUCTURAL NOTES, PLANS, SECTIONS AND DETAILS AND SHALL NOTIFY THE ENGINEER AND OWNER IN WRITING PRIOR TO CONSTRUCTION OF ANY CONDITIONS OR RESPONSIBILITIES WHICH ARE NOT ACCEPTABLE OR NOT UNDERSTOOD.

1. PLAIN CONCRETE, REINFORCED CONCRETE DEVELOP CRACKS. THE CRACKS ARE DUE TO INHERENT SHRINKAGE, CREEP AND RESTRAINING EFFECTS. CRACKS ARE NORMALLY COSMETIC AND THE SYSTEM MAINTAINS SERVICEABILITY AND STRENGTH REQUIREMENTS. JOINTS MAY BE INDICATED TO CONTROL CRACKING, BUT ARE NOT MEANT TO ELIMINATE ALL CRACKING, AS THIS IS NOT PRACTICAL. THE CONTRACTOR SHALL USE ALL STANDARD MEANS TO INSURE PROPER PROTECTION AND CURING OF CEMENTIOUS MATERIALS TO REDUCE CRACKING. SURFACE SPALLING OR EXTREME CRACKING MAY BE CAUSED BY POOR MATERIAL OR PLACEMENT. CONTACT OUR OFFICE FOR POSSIBLE REPAIR REQUIREMENTS.

2. FOUNDATIONS HAVE BEEN DESIGNED WITHOUT VERTICAL OR LATERAL BEARING VALUES OR RECOMMENDATIONS FROM A GEOTECHNICAL CONSULTANT. FOUNDATIONS ARE TO BEAR ON STABLE SOILS COMPETENT IN SUSTAINING LOADS STATED IN THE FOUNDATION NOTES BELOW WITHOUT EXCESSIVE SETTLEMENT OR HEAVE. BE ADVISED THAT FOUNDATION MOVEMENT MAY OCCUR AND THAT DESIGNS CONTAINED HEREIN DO NOT ATTEMPT TO MITIGATE SOIL CONDITIONS. STRUCTURES MAY BE AT RISK OF DAMAGE WHERE STABLE SOILS ARE NOT PRESENT. ATTENTION TO PROPER SOIL PREPARATION, GRADING AS WELL AS PROPER DRAINAGE AWAY FROM STRUCTURE, IS ESSENTIAL IN REDUCING SOIL MOVEMENT.

3. VARIATION IN DIMENSIONS MAY OCCUR AS A RESULT OF THERMAL INFLUENCES, NATURAL DEFLECTIONS AND/OR CAMBERS OF MEMBERS. AS A RESULT, QUANTITIES MAY VARY AND ARCHITECTURAL FINISHES MAY BE AT RISK OF COSMETIC VARIATION OR DAMAGE.

4. DESIGNS HAVE BEEN COMPLETED USING THE CODE STATED IN THE BASIS FOR DESIGN. WHERE MORE THAN ONE REFERENCE IS LISTED BELOW, THE REFERENCE THAT CORRESPONDS TO THE CODE STATED IN THE BASIS OF DESIGN SHALL BE USED. OTHER SPECIALIZED CODES OR DIRECTIVES (OSHA, AASHTO, ETC.) ARE NOT USED IN THE PREPARATION OF THESE DOCUMENTS AND ARE NOT REFERENCED.

5. DESIGNS HAVE BEEN COMPLETED USING THE CODE STATED IN THE BASIS FOR DESIGN. WHERE MORE THAN ONE REFERENCE IS LISTED BELOW, THE REFERENCE THAT CORRESPONDS TO THE CODE STATED IN THE BASIS OF DESIGN SHALL BE USED. OTHER SPECIALIZED CODES OR DIRECTIVES (OSHA, AASHTO, ETC.) ARE NOT USED IN THE PREPARATION OF THESE DOCUMENTS AND ARE NOT REFERENCED.

6. THESE DRAWINGS HAVE BEEN PREPARED USING STANDARDS OF PROFESSIONAL CARE AND COMPLETENESS NORMALLY EXERCISED UNDER SIMILAR CIRCUMSTANCES BY REPUTABLE STRUCTURAL ENGINEERS IN THIS OR SIMILAR LOCALITIES. THEY NECESSARILY ASSUME THAT THE WORK DEPICTED WILL BE PERFORMED BY AN EXPERIENCED CONTRACTOR, SUBCONTRACTOR AND/OR WORKPERSONS WHO HAVE A WORKING KNOWLEDGE OF THE APPLICABLE CODE STANDARDS AND REQUIREMENTS AND OF INDUSTRY ACCEPTED STANDARD GOOD PRACTICE. AS NOT EVERY CONDITION OR ELEMENT IS (OR CAN BE) EXPLICITLY SHOWN ON THESE DRAWINGS, IT IS UNDERSTOOD THAT THE CONTRACTOR WILL USE INDUSTRY ACCEPTED STANDARD GOOD PRACTICE FOR ALL WORK NOT EXPLICITLY SHOWN.

7. THESE DRAWINGS REPRESENT THE FINISHED STRUCTURE. THEY DO NOT INDICATE THE METHOD OF CONSTRUCTION. THE CONTRACTOR SHALL BE SOLELY RESPONSIBLE FOR CONSTRUCTION MEANS, METHODS, TECHNIQUES, SEQUENCES AND PROCEDURES. IT SHALL BE THE CONTRACTOR'S RESPONSIBILITY TO DESIGN AND PROVIDE ADEQUATE SHORING, BRACING, FORMWORK, ETC. AS REQUIRED FOR THE PROTECTION OF LIFE AND PROPERTY DURING CONSTRUCTION. VISITS TO THE SITE BY THE STRUCTURAL ENGINEER SHALL NOT INCLUDE INSPECTION OF THE ABOVE ITEMS.

8. THE CONTRACTOR SHALL BE RESPONSIBLE FOR ALL EXCAVATION PROCEDURES INCLUDING SHORING AND PROTECTION OF ADJACENT PROPERTY, STRUCTURES, STREETS AND UTILITIES IN ACCORDANCE WITH THE LOCAL BUILDING DEPARTMENT. ALL WORK OR CONSTRUCTION SHALL COMPLY WITH ALL APPLICABLE BUILDING CODES, REGULATIONS AND SAFETY REQUIREMENTS.

9. THE CONTRACTOR SHALL BE RESPONSIBLE FOR VERIFICATION OF ALL DIMENSIONS, CONDITIONS AND ELEVATIONS WITH ALL TRADE DRAWINGS PRIOR TO START OF CONSTRUCTION. THE CONTRACTOR SHALL INFORM THE ENGINEER IN WRITING OF ANY DISCREPANCIES OR OMISSIONS NOTED ON THE DRAWINGS. ANY SUCH DISCREPANCY, OMISSION, OR VARIATION NOT REPORTED BEFORE START OF CONSTRUCTION SHALL BE THE RESPONSIBILITY OF THE CONTRACTOR.

10. WHERE REFERENCE IS MADE TO VARIOUS TEST STANDARDS FOR MATERIALS, SUCH STANDARDS SHALL BE THE LATEST EDITION AND/OR ADDENDA.

11. TYPICAL DETAILS AND NOTES SHALL APPLY, THOUGH NOT NECESSARILY INDICATED AT A SPECIFIC LOCATION ON PLANS. WHERE NO DETAILS ARE SHOWN, CONSTRUCTION SHALL CONFORM TO SIMILAR WORK ON THE PROJECT. DETAILS MAY SHOW ONLY ONE SIDE OF CONNECTION OR MAY OMIT INFORMATION FOR CLARITY. WHERE DISCREPANCIES OCCUR IN THESE DRAWINGS, NOTES AND DETAILS ON DRAWINGS SHALL TAKE PRECEDENCE OVER GENERAL STRUCTURAL NOTES AND TYPICAL DETAILS.

12. ALL OPENINGS ARE NOT SHOWN ON THESE DRAWINGS. ESTABLISH AND VERIFY ALL OPENINGS AND INSERTS FOR ARCHITECTURAL, MECHANICAL, PLUMBING AND ELECTRICAL WITH APPROPRIATE TRADES, DRAWINGS AND SUBCONTRACTORS PRIOR TO CONSTRUCTION. OPENINGS MAY REQUIRE ADDITIONAL REINFORCING OR SUPPORTS AS SHOWN ON TYPICAL DETAILS. IF TYPICAL DETAILS FOR ALL CONDITIONS ARE NOT INCLUDED HEREIN, IT SHALL BE THE RESPONSIBILITY OF THE CONTRACTOR TO REQUEST IN WRITING ADDITIONAL INFORMATION.

13. ALL INSPECTIONS REQUIRED BY THE BUILDING CODES, LOCAL BUILDING OFFICIALS, OR BY THESE PLANS SHALL BE PROVIDED BY AN INDEPENDENT INSPECTION COMPANY OR, THE BUILDING DEPARTMENT. INSPECTION REQUIREMENTS STATED HEREIN ARE PARTIAL. COMPLETE INSPECTION REQUIREMENTS SHALL BE AS DIRECTED BY THE LOCAL BUILDING DEPARTMENT. SITE VISITS BY THE ENGINEER DO NOT CONSTITUTE AN INSPECTION, UNLESS SPECIFICALLY CONTRACTED FOR.

14. SHOP DRAWINGS SHALL BE SUBMITTED FOR ALL STRUCTURAL ITEMS. SHOP DRAWINGS ARE REVIEWED ONLY FOR GENERAL COMPLIANCE WITH THE STRUCTURAL DRAWINGS. REVIEW DOES NOT INDICATE THAT THE SHOP DRAWINGS ARE CORRECT OR COMPLETE. RESPONSIBILITY FOR CORRECTNESS SHALL REST WITH THE CONTRACTOR. ANY CHANGES, SUBSTITUTIONS, OR DEVIATIONS FROM CONTRACT DRAWINGS SHALL BE CLOUDED. ANY OF THE AFOREMENTIONED SHALL NOT BE CONSIDERED APPROVED AFTER ENGINEER'S REVIEW UNLESS SPECIFICALLY NOTED ACCORDINGLY. THE SHOP DRAWINGS DO NOT SUPERSEDE OR REPLACE THE ORIGINAL CONTRACT DRAWINGS. ANY ENGINEERING PROVIDED BY OTHERS AND SUBMITTED FOR REVIEW SHALL BEAR THE SEAL OF AN APPROPRIATELY REGISTERED ENGINEER. THE ENGINEER SHALL NOT BE RESPONSIBLE FOR THE ADEQUACY OF ENGINEERING DESIGNS PERFORMED BY OTHERS.

FOUNDATION NOTES:

1. NO SOIL REPORT AVAILABLE. FOUNDATIONS AND SLABS TO BEAR ON STABLE SOIL ADEQUATELY PREPARED TO ELIMINATE SETTLEMENT OR HEAVE. CONTRACTOR TO INSURE THAT PROPER GRADING IS COMPLETED PROVIDING STABLE BEARING SOILS.

2. FOOTING BEARING DEPTH: 42" BELOW GRADE UNLESS OTHERWISE NOTED (FREEZE DEPTH)

3. MATERIAL CLASS: SANDY GRAVEL AND/OR GRAVEL (GW AND GP).

4. PER IBC TABLE 1806.2 PRESUMPTIVE LOAD-BEARING VALUES.

A) ALLOWABLE FOOTING BEARING: 2000 PSF. ONE-THIRD INCREASE FOR SEISMIC OR WIND LOAD COMBINATIONS

B) LATERAL BEARING PRESSURE: 200 PSF. FRICTION COEFFICIENT 0.35 (WITH 1.5 FACTOR SAFETY)

5. FOUNDATIONS AND SLABS TO BEAR ON STABLE SOIL ADEQUATELY PREPARED TO ELIMINATE SETTLEMENT OR HEAVE. CONTRACTOR TO INSURE THAT PROPER GRADING IS COMPLETED PROVIDING STABLE BEARING SOILS.

6. ALL FOOTINGS SHALL EXTEND TO DEPTH NOTED ON PLANS OR DETAIL. LOCATION OF FOUNDATIONS NEAR SLOPES SHALL COMPLY WITH IBC 1808.7. FOOTING EXCAVATIONS SHALL BE CLEAN AND FREE FROM LOOSE DEBRIS, STANDING WATER, OR UNCOMPACTED MATERIAL AT TIME OF CONCRETE PLACEMENT.

7. UNLESS NOTED OTHERWISE CONCRETE SLABS ON GRADE SHALL BE SUPPORTED ON NON-FROST SUSCEPTIBLE FILL. FILL MATERIAL SHOULD BE MOISTENED, BUT NOT SATURATED JUST PRIOR TO PLACING CONCRETE. CARE SHALL BE TAKEN IN PLACING SLABS ON GRADE SO AS NOT TO DISTURB FILL MATERIAL OR REINFORCING.

8. SITE PREPARATION AND GRADING REQUIREMENTS SHALL BE COMPLETED PRIOR TO CONSTRUCTION OF FOUNDATIONS. ANY TESTS, INSPECTIONS, FIELD OBSERVATIONS SHALL BE PERFORMED PRIOR TO PLACEMENT OF FOUNDATION REINFORCING STEEL OR CONCRETE. ALTERATIONS TO SITE PREPARATION OR GRADING SHALL BE REPORTED TO THE ENGINEER PRIOR TO FOUNDATION CONSTRUCTION.

REINFORCING STEEL:

1. REINFORCING STEEL SHALL CONFORM TO THE REQUIREMENTS OF ASTM A615. REINFORCING SHALL BE GRADE 60 (Fy = 60 KSI) DEFORMED BARS FOR ALL BARS #5 AND LARGER AND ALL BARS USED FOR CONCRETE WALLS, BEAMS, ELEVATED SLABS AND COLUMN PRIMARY REINFORCING. REINFORCING MAY BE GRADE 40 (Fy = 40 KSI) DEFORMED BARS FOR ALL BARS #4 AND SMALLER UNLESS NOTED OTHERWISE ON PLANS OR DETAILS. ALL REINFORCING TO BE WELDED SHALL BE ASTM A706, GRADE 60 LOW ALLOY WELDABLE STEEL.

2. ALL DIMENSIONS SHOWING THE LOCATION OF REINFORCING STEEL NOT NOTED AS "CLEAR" OR "CLR" ARE TO CENTER OF STEEL. MINIMUM COVER FOR NON-PRESTRESSED CONCRETE REINFORCING SHALL BE AS FOLLOWS, UNLESS NOTED OTHERWISE ON PLANS OR DETAILS:

EXPOSURE CONDITION:	MINIMUM COVER:	TOLERANCES (+/-):
CAST AGAINST AND PERMANENTLY EXPOSED TO EARTH:	3"	3/8"
EXPOSED TO EARTH OR WEATHER:		
#5 AND SMALLER:	1-1/2"	3/8"
#6 AND LARGER:	2"	3/8"

3. LAP SPLICES OF REINFORCING STEEL IN CONCRETE BEAMS, SLABS AND FOOTINGS SHALL BE ACCORDING TO ACI SECTION 12 OR LAP SCHEDULE, WHERE PRESENT, UNLESS NOTED OTHERWISE. STAGGER SPLICES A MINIMUM OF ONE LAP LENGTH. NO TACK WELDING OF REINFORCING BARS ALLOWED. LATEST ACI CODE AND DETAILING MANUAL APPLY. PROVIDE BENT CORNER BARS TO MATCH AND LAP WITH HORIZONTAL BARS AT ALL CORNERS AND INTERSECTIONS PER TYPICAL DETAILS. VERTICAL WALL BARS SHALL BE SPLICED AT OR NEAR FLOOR LINES. SPLICE BARS TOP BARS AT CENTER LINE OF SPAN AND BOTTOM BARS AT THE SUPPORT IN SPANDRELS, BEAMS, GRADE BEAMS, ETC. UNLESS NOTED OTHERWISE.

4. ALL REINFORCING SHALL BE BENT COLD. BARS SHALL NOT BE STRAIGHTENED AND RE-BENT. FIELD BENDING OF REBAR SHALL NOT BE ALLOWED UNLESS SPECIFICALLY NOTED.

5. WELDING OF REINFORCING BARS, METAL INSERTS, AND CONNECTIONS SHALL CONFORM WITH AWS D1.4 AND SHALL BE MADE ONLY AT LOCATIONS SHOWN ON PLANS OR DETAILS.

6. REINFORCING BAR SPACING SHOWN ON PLANS ARE AT MAXIMUM ON CENTERS. ALL BARS SHALL BE DETAILED AND PLACED PER CONCRETE REINFORCING STEEL INSTITUTE (CRSI) SPECIFICATIONS AND HANDBOOK. DOWEL ALL VERTICAL REINFORCING TO FOUNDATION. SECURELY TIE ALL BARS IN LOCATION BEFORE PLACING CONCRETE.

STEEL DECK:

1. ROOF DECK SHALL BE TYPE B-DECK, 1-1/2 INCH, 16 GAGE. ROOF DECK SPAN DIRECTION SHALL BE AS NOTED ON PLAN. DECK STEEL SHALL BE GALVANIZED AND COLOR PER OWNER'S CHOICE.

2. DECK SHALL BE ERECTED IN ACCORDANCE WITH MANUFACTURER'S RECOMMENDATIONS. ATTACH DECK TO SUPPORTING MEMBERS WITH #12-24 SELF DRILLING SCREWS OR HILTI X-HSN-24 HIGH SHEAR NAIL. ATTACHMENT PATTERN SHALL BE 36/7, AND AT 12" OC AT PERIMETER BEAMS, EDGES OF OPENINGS RUNNING PARALLEL TO DECK. SIDE SEAM ATTACHMENT SHALL BE BUTTON PUNCHES AT 12" OC.

3. STEEL DECK SUPPLIER SHALL PROVIDE ALL NECESSARY ACCESSORIES SUCH AS RIDGE AND VALLEY PLATES, SADDLES, COVER PLATES, ETC., TO MAKE THE JOB COMPLETE.

4. STEEL DECK SHALL HAVE AN EVALUATION SERVICE REPORT FOR THE BUILDING CODE LISTED IN THE BASIS OF DESIGN.

STRUCTURAL STEEL:

1. STRUCTURAL STEEL MEMBERS SHALL CONFORM WITH THE FOLLOWING STANDARDS AND MATERIAL PROPERTIES UNLESS NOTED OTHERWISE:

SHAPE	STANDARD	Fy
ROLLED WIDE FLANGE SECTIONS:	ASTM A992	50 KSI
OTHER STANDARD STEEL SHAPES AND ROLLED SECTIONS:	ASTM A36	36 KSI
BARS AND PLATES:	ASTM A36	36 KSI
PIPES:	ASTM A53 TYPE E OR S, GR B	35 KSI
TUBES:	ASTM A500 GRADE B	46 KSI
BOLTS AT STEEL CONNECTIONS:	ASTM A325	
FOUNDATION ANCHOR BOLTS:	ASTM F1554	36 KSI

2. ALL BOLTS SHALL BE INSTALLED AS BEARING-TYPE CONNECTIONS WITH THREADS EXCLUDED FROM SHEAR PLANE (TYPE "X" CONNECTION), UNLESS NOTED OTHERWISE. HIGH-STRENGTH BOLTS SHALL BE TIGHTENED USING ANY AISC APPROVED METHOD. BOLTS IN SHEAR/BEARING CONNECTIONS ARE TO BE TIGHTENED ACCORDING TO THE FOLLOWING:

BOLT TYPE	TIGHTENING
A307	SNUG TIGHT
A325N/A490N/A320N	SNUG TIGHT
A325X/A490X/A320X	SNUG TIGHT
F1584	SNUG TIGHT

3. ALL THREADED ROD AND THREADED STUDS SHALL BE ASTM A307 UNLESS NOTED OTHERWISE. ALL EXPANSION OR EPOXY BOLTS SHALL HAVE CURRENT ICC RATING FOR MATERIAL INTO WHICH INSTALLATION OCCURS. HEADED STUDS SHALL CONFORM TO ALL REQUIREMENTS OF THE LATEST EDITION OF THE "RECOMMENDED PRACTICES FOR STUD WELDING" AND THE "STRUCTURAL WELDING CODE" PUBLISHED BY AMERICAN WELDING SOCIETY (AWS). HEADED STUDS SHALL BE AUTOMATICALLY WELDED.

4. ALL STRUCTURAL AND MISCELLANEOUS STEEL SHALL BE FABRICATED AND ERECTED IN ACCORDANCE WITH AISC SPECIFICATIONS FOR THE DESIGN, FABRICATION AND ERECTION OF STRUCTURAL STEEL FOR BUILDINGS, LATEST EDITION.

5. WELDING SHALL BE PERFORMED BY WELDERS HOLDING VALID CERTIFICATES AND HAVING CURRENT EXPERIENCE IN THE TYPE OF WELD SHOWN ON THE DRAWINGS. ALL WELDING SHALL USE E70 SERIES LOW HYDROGEN ELECTRODES UNLESS NOTED OTHERWISE. ALL WELDS INVOLVING REINFORCING BARS SHALL USE E70 OR E90 SERIES ELECTRODES. ALL WELDING SHALL CONFORM TO THE LATEST AMERICAN WELDING SOCIETY (AWS) STANDARDS. WELDS ON DRAWINGS ARE SHOWN AS SHOP WELDS. CONTRACTOR MAY SHOP WELD OR FIELD WELD AT HIS DISCRETION. ALL FULL PENETRATION WELDS SHALL BE TESTED AND CERTIFIED BY AN INDEPENDENT TESTING LABORATORY.

6. ALL CLOSED HSS AND PIPE MEMBERS SHALL HAVE 1/4-INCH DIAMETER WEEP HOLES. COLUMNS SHALL HAVE WEEP HOLE WITH IN 2-INCHES OF BASE. HORIZONTAL MEMBERS SHALL HAVE WEEP HOLES ON BOTTOM FACE AT MEMBER LOW POINT.

REFERENCE DRAWINGS

DRAWING	DRAWING TITLE

STATE OF ALASKA 49TH Andrew P. Adams No. SE13603 REGISTERED PROFESSIONAL ENGINEER 9/12/19

GREAT NORTHERN ENGINEERING
137 E. ARCTIC, SUITE 101
PALMER, AK 99645
(907) 745-6988
GNE # 309090

REVISIONS

REV.	DATE	BY	APP'D.	DESCRIPTION
0	09/06/19	JM	AA	ISSUED FOR CONSTRUCTION

		MO	DAY	YR
SCALE				
DRAWN	J. MCCLAIN	08	06	19
CHK'D				
APP'D				
APP'D				
APPROVED				
DATE				
PROJECT				

PETRO STAR
VALDEZ PETROLEUM TERMINAL

VPT INFRASTRUCTURE - VCU PROJECT
STRUCTURAL - GENERAL NOTES

DRAWING NUMBER 70-CS-GN-122824-02-02 REV. 0

GENERAL STRUCTURAL NOTES (CONTINUED):

CONCRETE:

1. MINIMUM 28 DAY STRENGTH (f'c) SHALL BE AS FOLLOWS:

FOUNDATIONS	4000 PSI, W/C= 0.45 *
SLABS ON GROUND	4000 PSI, W/C= 0.45 *

* CONCRETE SHALL HAVE 6% AIR ENTRAINMENT (+/- 2%)

2. CONCRETE MIXES SHALL BE DESIGNED BY A CERTIFIED LABORATORY AND APPROVED BY THE ENGINEER.

3. ALL CONCRETE SHALL BE REGULAR WEIGHT OF 145 POUNDS PER CUBIC FOOT USING HARDROCK AGGREGATES. AGGREGATE USED IN CONCRETE SHALL CONFORM TO ASTM C33, CONCRETE AGGREGATES.

4. MAXIMUM SLUMP FOR SHALL BE 4 INCHES. WATER SHALL BE CLEAN AND POTABLE.

5. PORTLAND CEMENT SHALL CONFORM TO ASTM C150. TYPE I/II CEMENT

6. NO MORE THAN 90 MINUTES SHALL ELAPSE BETWEEN CONCRETE BATCHING AND CONCRETE PLACEMENT, UNLESS APPROVED BY THE ENGINEER OR AUTHORIZED TESTING AGENCY.

7. CONCRETE MIXING, PLACEMENT AND QUALITY SHALL BE PER IBC CHAPTER 19, ASTM C94, ASTM C685, AND ACI 302. MECHANICALLY VIBRATE ALL CONCRETE WHEN PLACED, EXCEPT SLABS ON GRADE NEED ONLY BE VIBRATED OR THOROUGHLY RODDED AROUND EMBEDDED STRAPS OR HARDWARE, BOLTS FOR HOLDOWNS AND CURBS AND EDGES OF SLAB STEPS SIMILAR ELEMENTS. REMOVE ALL DEBRIS FROM FORMS PRIOR TO PLACING CONCRETE. CONCRETE SHALL NOT BE DROPPED THROUGH REINFORCING STEEL (AS IN WALLS AND COLUMNS) SO AS TO CAUSE SEGREGATION OF AGGREGATES. UNCONFINED FALL OF CONCRETE SHALL NOT EXCEED 5 FEET. CARE SHALL BE TAKEN IN PLACING SLABS ON GRADE SO AS NOT TO DISTURB FILL MATERIAL.

8. ALL ITEMS TO BE CAST IN CONCRETE SUCH AS REINFORCING, DOWELS, BOLTS, ANCHORS, PIPES, SLEEVES, ETC. SHALL BE SECURELY POSITIONED IN THE FORMS BEFORE PLACING THE CONCRETE.

9. CONSTRUCTION JOINTS OR POUR JOINTS IN STRUCTURAL ELEMENTS (WALLS, FOUNDATIONS, SLABS, ETC.) NOT SPECIFICALLY SHOWN OR NOTED ON THE DRAWINGS REQUIRE PRIOR APPROVAL OF THE ENGINEER. CONTRACTOR SHALL SUBMIT SHOP DRAWINGS SHOWING PROPOSED JOINTS TO ENGINEER FOR APPROVAL.

10. NO PIPES OR ELECTRICAL CONDUITS SHALL NOT BE EMBEDDED IN STRUCTURAL CONCRETE EXCEPT WHERE SPECIFICALLY APPROVED BY THE ENGINEER. MAXIMUM PIPE SIZE SHALL BE 1/3 OF THE SLAB THICKNESS AND LOCATED AT THE MID-DEPTH. MINIMUM SPACING SHALL BE 3 TIMES THE PIPE DIAMETER. PIPES SHALL NOT IMPAIR THE STRENGTH OF THE MEMBER.

11. PROTECT CONCRETE FROM DAMAGE OR REDUCED STRENGTH DUE TO COLD OR HOT WEATHER IN ACCORDANCE WITH ACI 305 AND 306 AND ACI 318 SECTIONS 5.12 AND 5.13.

12. ALL CORNERS SHALL HAVE 3/4-INCH CHAMFER.

INSPECTION NOTES:

1. IN ADDITION TO THE STANDARD INSPECTIONS BY THE BUILDING OFFICIAL REQUIRED PER IBC CHAPTER 17, THE OWNER SHALL EMPLOY ONE OR MORE SPECIAL INSPECTORS WHO SHALL PROVIDE INSPECTIONS DURING CONSTRUCTION FOR THE TYPES OF WORK LISTED IN THIS SECTION.

2. THE SPECIAL INSPECTOR SHALL BE A QUALIFIED PERSON WHO SHALL DEMONSTRATE COMPETENCE, TO THE SATISFACTION OF THE BUILDING OFFICIAL, FOR INSPECTION OF THE PARTICULAR TYPE OF CONSTRUCTION OR OPERATION REQUIRING SPECIAL INSPECTION.

3. THE SPECIAL INSPECTOR SHALL INSPECT THE WORK ASSIGNED FOR CONFORMANCE WITH THE APPROVED CONTRACT DRAWINGS AND SPECIFICATIONS. SPECIAL INSPECTOR SHALL FURNISH INSPECTION REPORTS TO THE BUILDING OFFICIAL, THE ENGINEER OF RECORD, AND OTHER DESIGNATED PERSONS. ALL DISCREPANCIES SHALL BE BROUGHT TO THE IMMEDIATE ATTENTION OF THE CONTRACTOR FOR CORRECTION, THEN, IF UNCORRECTED, TO THE ENGINEER AND THE BUILDING OFFICIAL. THE SPECIAL INSPECTOR SHALL SUBMIT A FINAL SIGNED REPORT STATING WHETHER THE WORK REQUIRING SPECIAL INSPECTION WAS, TO THE BEST OF THE INSPECTOR'S KNOWLEDGE, IN CONFORMANCE WITH THE APPROVED PLANS AND SPECIFICATIONS AND THE APPLICABLE CODE PROVISIONS.

4. INSPECTORS SHALL INSPECT FROM AN APPROVED SET OF CONTRACT DRAWINGS. SHOP DRAWINGS SHALL NOT BE USED IN LIEU OF THE APPROVED CONTRACT DRAWINGS FOR INSPECTION PURPOSES.

5. CERTIFICATE OF APPROVAL REGARDING MATERIALS AND INSPECTION OF PREFABRICATED ITEMS SHALL BE PROVIDED IN ACCORDANCE WITH IBC SECTION 1703 THE QUALITY ASSURANCE PROGRAM.

STRUCTURAL STEEL COATINGS:

1.1 SCOPE
A. THIS SPECIFICATION DEFINES THE SHOP AND FIELD APPLICATION OF PROTECTIVE COATING SYSTEMS INCLUDING MATERIALS, SURFACE PREPARATION, APPLICATION, CURING TESTING AND CLEAN-UP FOR STEEL STRUCTURES.

B. PROVIDE, FURNISH, AND APPLY ALL PROTECTIVE COATINGS AS SCHEDULED HEREIN AND AS REQUIRED ON THE DRAWINGS. THIS INCLUDES ALL STEEL STRUCTURES INSIDE THE BUILDING AND OUTSIDE, BUT DOES NOT INCLUDE PIPE.
1.2 MATERIAL

C. ALL MATERIAL SHALL OF THE SPECIFIED QUALITY AND ALL WORK SHALL BE PROVIDED IN A THOROUGH AND WORKMANLIKE MANNER. THE ENTIRE OPERATION OF CLEANING, PREPARATION, APPLICATION, CURING AND INSPECTION OF THE STRUCTURE SHALL BE PERFORMED BY AN APPROVED APPLICATOR SKILLED IN THE APPLICATION OF THE SPECIFIED MATERIALS.
1.3 EQUIPMENT

D. EQUIPMENT FOR CLEANING AND APPLYING THE COATING SYSTEM SHALL BE OF ADEQUATE CAPACITY AND BE IN SUCH CONDITION AS TO PERMIT THE APPLICATORS TO FOLLOW THE PROCEDURE AND OBTAIN THE RESULTS PRESCRIBED IN THIS SPECIFICATION.
1.4 COORDINATION

E. EXAMINE REQUIREMENTS OF OTHER TRADES FOR PROVISIONS REGARDING PAINTING. INSPECT WORK BY OTHERS PRIOR TO APPLICATION, PARTICULARLY WELDMENTS. ADVISE THE PROJECT ENGINEER IF OTHER TRADES IMPACT COATING APPLICATORS WORK.
1.5 REFERENCES

F. THE CONTRACTOR SHALL COMPLY WITH THE APPLICABLE PROVISIONS OF THE STEEL STRUCTURES PAINTING COUNCIL (SSPC):

1. PA-1 SHOP, FIELD AND MAINTENANCE PAINTING
2. PA-2 METHOD FOR MEASUREMENT OF DRY PAINT THICKNESS WITH MAGNETIC GAGES.
3. SP-1 SOLVENT CLEANING
4. SP-2 HAND TOOL CLEANING
5. SP-3 POWER TOOL CLEANING
6. SP-5 WHITE METAL BLAST CLEANING
7. SP-6 COMMERCIAL BLAST CLEANING
8. SP-7 BRUSH-OFF BLAST CLEANING
9. SP-10 NEAR-WHITE BLAST CLEANING

PART 2 - PRODUCTS
2.1 MANUFACTURER
A. COATING TYPES SHALL BE PROVIDED BY CARBOLINE, AMERON, MOBIL, TNEMEC, OR AN OWNER APPROVED MANUFACTURER.

B. ALL COATINGS SHALL CONSIST OF A PRIMER AND A TOP COAT.

C. MATERIALS SHALL BE MANUFACTURER COMPOSED, PROVIDED IN SEALED CONTAINERS, AND MUST NOT HAVE EXCEEDED THE LABELED EXPIRATION DATE FOR THE SHELF LIFE.

D. THE CONTRACTOR SHALL RETAIN THE BATCH NUMBERS FROM THE ORIGINAL CONTAINERS AND TURN THE BATCH NUMBERS OVER TO THE OWNER WHEN THE CONTAINER IS EMPTIED.

E. THE CONTRACTOR SHALL SUBMIT THE PROPOSED COATING SYSTEM FOR APPROVAL BY THE OWNER, OR HIS DESIGNEE, PROJECT ENGINEER PRIOR TO PURCHASING MATERIALS OR BEGINNING OF WORK.

2.2 COLOR
A. THE PRIMER MAY BE OF ANY COLOR OTHER THAN THE COLOR OF THE TOP COAT.

B. THE TOP COAT COLOR FOR ALL STEEL STRUCTURES SHALL BE WHITE MATCHING THE COLOR OF OTHER EXISTING FACILITY STEEL STRUCTURES EXCEPT FOR FACTORY SHIPPED PRE-COATED WITH FINISH COATING.

PART 3 - EXECUTION
3.1 SURFACE PREPARATION
A. SURFACES TO BE COATED SHALL BE CLEANED AND PROPERLY PREPARED BEFORE ANY PAINT IS APPLIED.

B. ALL OIL, GREASE, AND OTHER DELETERIOUS MATTER SHALL BE REMOVED PRIOR TO BLAST CLEANING BY SOLVENT CLEANING PER SSPC-SPI.

C. THE BLAST-CLEANED SURFACE SHALL HAVE UNIFORM, DENSE ANCHOR PATTERN WITH IRREGULARLY SHAPED PEAKS AND VALLEYS, THE MINIMUM PROFILE DEPTH SHALL BE .75 MIL AND A MAXIMUM OF 2.0 MILS WITH AN AVERAGE DEPTH OF 1.5 MILS. THE SURFACE PROFILE SHALL BE DETERMINED WITH AN ACCEPTANCE PROFILOMETER OR BY VISUAL COMPARISON WITH A KEANE-TATOR COMPARATOR OR APPROVED EQUAL UNDER FLASH-O-LENS MAGNIFICATION. IT SHALL BE MONITORED AS NECESSARY TO MAINTAIN THIS PROFILE.

D. SAND USED FOR SANDBLAST CLEANING SHALL BE DRY, NEUTRAL PH, HARD SILICEOUS MATERIAL OF ANGULAR CONFIGURATION AND FREE OF DUST, CLAY OR OTHER FOREIGN PARTICLES.

3.2 APPLICATION OF COATING MATERIALS
A. WELD BEVELS AND WELD AREAS WHERE WELDING IS TO BE PERFORMED AFTER ERECTION SHALL HAVE A MINIMUM OF 1/2" OF THE ADJOINING SURFACES MASKED OFF BEFORE PRIMING. MASKING MATERIALS SHALL BE REMOVED AFTER COMPLETION OF THE COATING OPERATION.

B. ALL COATING MATERIALS SHALL BE APPLIED IN ACCORDANCE WITH APPLICABLE SECTIONS OF SSPC-PA1 AND THIS SPECIFICATION.

C. THE PRIMER COAT SHALL BE APPLIED WITHIN 8 HOURS AFTER SAND BLASTING AND BEFORE OXIDATION OF THE CLEANED SURFACE OCCURS. IF FOR ANY REASON SURFACE OXIDATION OCCURS, THE SURFACE SHALL BE "BRUSHED-OFF BLAST CLEANED" IN ACCORDANCE WITH SSPC-SP7 TO REMOVE THE OXIDES PRIOR TO COATING.

D. ALL COATING MATERIALS SHALL BE SPRAY APPLIED, EXCLUDING BRUSH TOUCH-UP, UNLESS SPECIFICALLY EXCEPTED BY OWNER/PROJECT ENGINEER.

E. ALL COATING MATERIALS SHALL BE THOROUGHLY MIXED AND APPLIED IN STRICT ACCORDANCE WITH THE DIRECTIONS AND RECOMMENDATIONS OF THE MANUFACTURER. THE MANUFACTURER'S RECOMMENDED POT LIFE SHALL NOT BE EXCEEDED.

F. AIRLESS SPRAY EQUIPMENT MAY BE SUBSTITUTED FOR CONVENTIONAL SPRAY EQUIPMENT FOR ALL COATINGS PROVIDE THE AIRLESS METHODS OF APPLICATION AND THE EQUIPMENT TO BE USED COMPLY WITH THE INSTRUCTIONS AND RECOMMENDATIONS OF THE COATING MANUFACTURER.

3.3 SHOP COATINGS
A. PRIMERS AND FINISH COATS SHALL BE GENERICALLY COMPATIBLE.

B. SHOP FABRICATED ASSEMBLIES SHALL BE POWER TOOL CLEANED, PRIMED, AND FINISH COATED BY THE FABRICATOR USING THE SYSTEM SPECIFIED.

3.4 FIELD COATINGS
A. PORTIONS OF THE PRIME COAT OR MANUFACTURER'S STANDARD FINISH WHICH HAVE BEEN DAMAGED DURING SHIPPING OR ERECTION SHALL BE CLEANED AND REPAIRED BY THE FIELD PAINTING CONTRACTOR PRIOR TO APPLICATION OF THE FINISH COAT.

3.5 WORK EXCLUDED
A. THE FOLLOWING MATERIALS, ITEMS, OR SURFACES DO NOT REQUIRE SHOP OR FIELD PAINTING.

1. NICKEL
2. ALUMINUM
3. GALVANIZED ITEMS (EXCEPT FOR TOUCH-UP). THIS DOES NOT INCLUDE THE FIRE WATER.
4. NONFERROUS METAL
5. CONCRETE AND MASONRY SURFACES

3.6 COATING DAMAGE AND REPAIRS
A. GALVANIZED OR INORGANIC ZINC COATED SURFACES DAMAGED BY WELDING, BURNING, OR MECHANICAL ABRASION SHALL BE BLAST CLEANED AND COATED WITH INORGANIC ZINC. GALVANIZED SURFACES WHICH ARE NOT FEASIBLE OR PRACTICAL TO BLAST CLEAN, SHALL BE HAND OR POWER TOOL CLEANED AND TOUCHED UP WITH "ZRC" COLD GALVANIZED COMPOUND AS MANUFACTURED BY THE SEALUBE CO., RUSTOLEUM 7085, SPRAYON 740, OR APPROVED EQUAL. INORGANIC ZINC PRIMER NEED NOT BE APPLIED TO ABOVE OR BELOW GROUND INSULATED GIRTH WELDS AND REPAIRED AREAS.

B. WELD AREAS AND DAMAGED COATING AREAS SHALL BE BLAST CLEANED AND COATED WITH THE COATING SYSTEM SPECIFIED FOR THE EQUIPMENT AFTER INSTALLATION.

C. FIELD WELDS AND DAMAGED COATING AREAS, IN LOCATIONS WHERE BLAST CLEANING IS NOT FEASIBLE, SHALL BE POWER TOOL CLEANED IN ACCORDANCE WITH SSPC-SP2 OR SP3.

D. MECHANICAL CLEANING (SP2 OR SP3) MAY BE USED FOR MINOR COATING REPAIRS ONLY WITH THE APPROVAL OF THE PROJECT ENGINEER. BUILDING INTERIORS WILL REQUIRE MECHANICAL CLEANING (SP2 OR SP3) IN LIEU OF BLASTING CLEANING.

E. MINOR COATING DAMAGE MAY BE REPAIRED BY BRUSH APPLICATION UPON APPROVAL OF THE PROJECT ENGINEER.

3.7 HOUSEKEEPING AND CLEANUP
A. ALL SURFACES NOT RECEIVING A PROTECTIVE COATING SHALL BE PROTECTED FROM SPILLS, OVERSPRAY, SPLATTERS OR PREPARATION MATERIALS OR DUST BY MEANS OF COVERS OR DROP CLOTHES.

B. ANY OVER SPRAY, SPILLS, DROPS, OR SPLATTERS ON BUILDING SURFACES OR EQUIPMENT INCLUDING CONCRETE FLOORS AND WINDOWS SHALL BE COMPLETELY REMOVED.

C. ALL CONTAINERS, DROP CLOTHES, SCAFFOLDING, AND COATING APPLICATION MATERIALS SHALL BE REMOVED FROM THE JOB SITE AND PROPERLY DISPOSED BY THE CONTRACTOR.

D. UPON COMPLETION OF THE PROTECTIVE COATING APPLICATION SYSTEMS AND CLEANUP THE CONTRACTOR SHALL REQUEST AN INSPECTION BY THE PROJECT ENGINEER OF THE COMPLETED COATING SYSTEM. THE PROJECT ENGINEER WILL PROVIDE APPROVAL OF THE APPLICATION AND CLEANUP PRIOR TO FINAL ACCEPTANCE OF THE PROJECT.

CONCRETE	CONTINUOUS	PERIODIC
INSPECT REINF STEEL AND PLACEMENT		X
INSPECT ALL PRE-INSTALLED ANCHOR RODS		X
INSPECT ALL POST-INSTALLED ANCHOR RODS	X	
VERIFY USE OF APPROVED DESIGN MIX		X
INSPECT FORMWORK		X
PERFORM SLUMP, AIR, AND TEMP TESTS	X	
FABRICATE TEST SPECIMENS	X	
TEST CYLINDERS		X
INSPECT CONCRETE PLACEMENT TECHNIQUES	X	
INSPECT CURING TECHNIQUES		X

CONCRETE INSPECTION AND TESTING SHALL BE PER ACI 301.

STEEL TEST AND INSPECTION	CONTINUOUS	PERIODIC
PRE-FABRICATION REVIEWS:		
-APPROVE WELD PROCEDURE		X
-APPROVE WELDER QUALIFICATIONS		X
-APPROVE FABRICATOR QA/QC PROGRAM		X
VERIFY HSB, NUT & WASHER MATERIAL:		
-ID MARKS CONFORM TO STANDARDS		X
-MFR'S CERTIFICATE OF COMPLIANCE		X
-SKIDMORE TEST OF SQUIRTER DTI'S		X
VERIFY STRUCTURAL STEEL MATERIAL		
-MILL CERTS CONFORM TO AISC 360		X
VERIFY WELD FILLER MATERIAL		
-ID MARKS MATCH WELD PROCEDURES		X
-MFR'S CERTIFICATE OF COMPLIANCE		X
VISUALLY INSPECT ALL WELDS		
-CJP AND PJP GROOVE WELDS	X	
-MULTI PASS FILLET WELDS	X	
-SINGLE PASS FILLET WELDS > 5/16"	X	
-PLUG AND SLOT WELDS	X	
-SINGLE PASS FILLET WELDS ≤ 5/16"		X
-HANDRAIL AND STAIR WELDS		X
INSPECT STEEL FRAME JOINT DETAILS		
-BRACING AND STIFFENER DETAILS		X
-MEMBER LOCATIONS		X
-JOINT DETAILS AT EACH LOCATION		X
INSPECT HIGH-STRENGTH BOLTING		
-SNUG-TIGHT JOINTS		X
-FT AND SC JOINTS (BY DTI)		X

REFERENCE IBC CHAPTER 17 FOR ADDITIONAL INFORMATION.

SOILS	CONTINUOUS	PERIODIC
VERIFY MATERIALS BELOW SHALLOW FOUNDATIONS ARE ADEQUATE TO ACHIEVE THE DESIGN BEARING CAPACITY		X
VERIFY EXCAVATIONS ARE EXTENDED TO PROPER DEPTH AND HAVE REACHED PROPER MATERIAL		X
PERFORM CLASSIFICATION AND TESTING OF CONTROLLED FILL MATERIALS		X
VERIFY USE OF PROPER MATERIAL DENSITIES, AND LIFT THICKNESSES DURING PLACEMENT AND COMPACTION OF CONTROLLED FILL	X	
PRIOR TO PLACEMENT OF CONTROLLED FILL, OBSERVE SUBGRADE AND VERIFY THAT SITE HAS BEEN PREPARED PROPERLY		X

SOILS INSPECTION AND TESTING SHALL BE PER IBC SECTION 1705.

POST-INSTALLED ANCHORAGE	CONTINUOUS	PERIODIC
INSTALLATION IN HARDENED CONCRETE		X

INSPECT BASED ON SPECIFIC PRODUCT SPECIFICATIONS AND ICC EVALUATION REPORT.

REFERENCE DRAWINGS

DRAWING	DRAWING TITLE

STATE OF ALASKA 49TH Andrew P. Adams No. SE13603 REGISTERED PROFESSIONAL ENGINEER
9/12/19

GREAT NORTHERN ENGINEERING
137 E. ARCTIC, SUITE 101
PALMER, AK 99645
(907) 745-6988
GNE # 309090

REVISIONS

REV.	DATE	BY	APP'D.	DESCRIPTION
0	09/06/19	JM	AA	ISSUED FOR CONSTRUCTION
1	09/12/19	JM	AA	ISSUED FOR CONSTRUCTION

		MO	DAY	YR
SCALE				
DRAWN	J. MCCLAIN	08	06	19
CHK'D				
APP'D				
APP'D				
APPROVED				
DATE				
PROJECT				

PETRO STAR
VALDEZ PETROLEUM TERMINAL

VPT INFRASTRUCTURE - VCU PROJECT
STRUCTURAL - GENERAL NOTES

DRAWING NUMBER 70-CS-GN-122824-02-03 REV. 1

SHEET NOTES:
1. INSTALL PIPE BOLLARDS IN ACCORDANCE WITH IFC 2012, SECTIONS 312, VEHICLE IMPACT PROTECTION.
2. CARE MUST BE TAKEN WHILE EXCAVATING NEAR THE EARTH BERM AS TO AVOID RUPTURE OF THE ELECTRICAL CONDUIT AND THE LIQUID CONTAINMENT BARRIER.

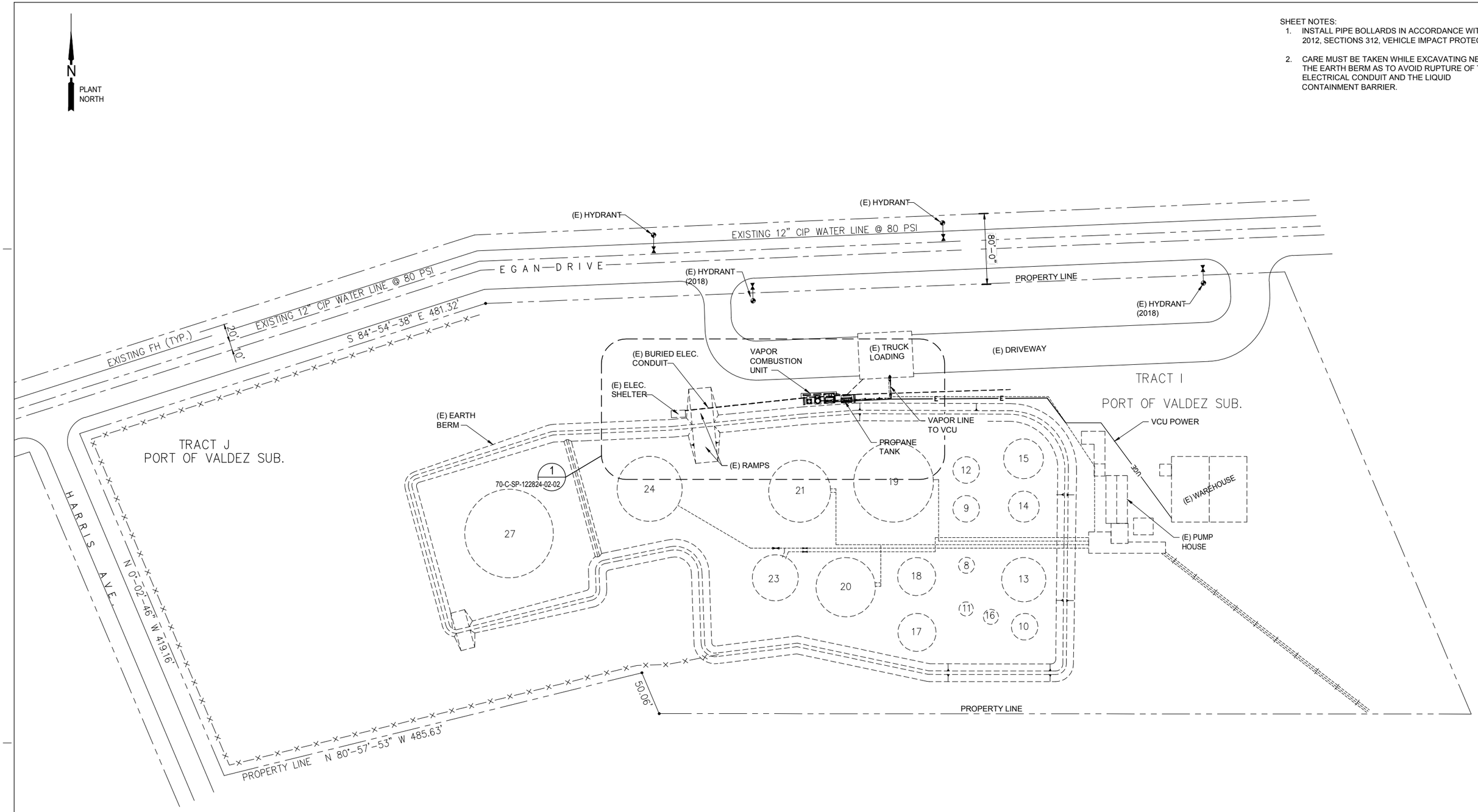

REFERENCE DRAWINGS	
DRAWING	DRAWING TITLE

STATE OF ALASKA
49 TH
Andrew P. Adams
No. SE13603
09/12/19

GREAT NORTHERN ENGINEERING
137 E. ARCTIC, SUITE 101
PALMER, AK 99645
(907) 745-6988

REVISIONS

REV.	DATE	BY	APP'D.	DESCRIPTION
0	09/06/19	JM	AA	ISSUED FOR CONSTRUCTION
1	09/12/19	JM	AA	ISSUED FOR CONSTRUCTION

		MO	DAY	YR
SCALE	1" = 50'			
DRAWN	E. KOPPANA	08	08	19
CHK'D				
APP'D				
APP'D				
APPROVED				
DATE				
PROJECT				

PETRO STAR
VALDEZ PETROLEUM TERMINAL

VPT INFRASTRUCTURE - VCU PROJECT
CIVIL - SITE PLAN

DRAWING NUMBER 70-C-SP-122824-02-01 REV. 1

OCCUPANCY:

FACTORY, GROUP F-1

TYPE OF CONSTRUCTION:

TYPE IIB CONSTRUCTION

VPT EQUIPMENT MINIMUM OFFSETS AND CLEARANCES				
TYPE OF EQUIPMENT	NOTE	MIN. SPACING FROM EQUIPMENT ONSITE	VALUE	REF
VAPOR COMBUSTION STACK (VCS)	1	500 WG LP VESSEL	25 FEET	IFC CHAPTER 57 AND SECTION 5706.5.1.10.4
	2	NEAREST BUILDING OF IMPORTANCE	25 FEET	
	3	PROPERTY LINE	25 FEET	
	4	BULK FUEL STORAGE TANK	25 FEET	
500 WG PROPANE VESSEL	5	TO VCU	25 FEET	NFPA 58 TABLE 6.3.1.1
	6	NEAREST BUILDING OF IMPORTANCE	10 FEET	
	7	PROPERTY LINE	10 FEET	
BULK FUEL STORAGE TANK	8	TO VAPOR COMBUSTION STACK	50 FEET	OWNER SPECIFIED
VAPOR COMBUSTION STACK (VCS)	9	TO NEAREST BUILDING OF IMPORTANCE	50 FEET	OWNER SPECIFIED

SHEET NOTES:

1. CARE MUST BE TAKEN WHILE EXCAVATING NEAR THE EARTH BERM AS TO AVOID RUPTURE OF THE ELECTRICAL CONDUIT AND THE LIQUID CONTAINMENT BARRIER.

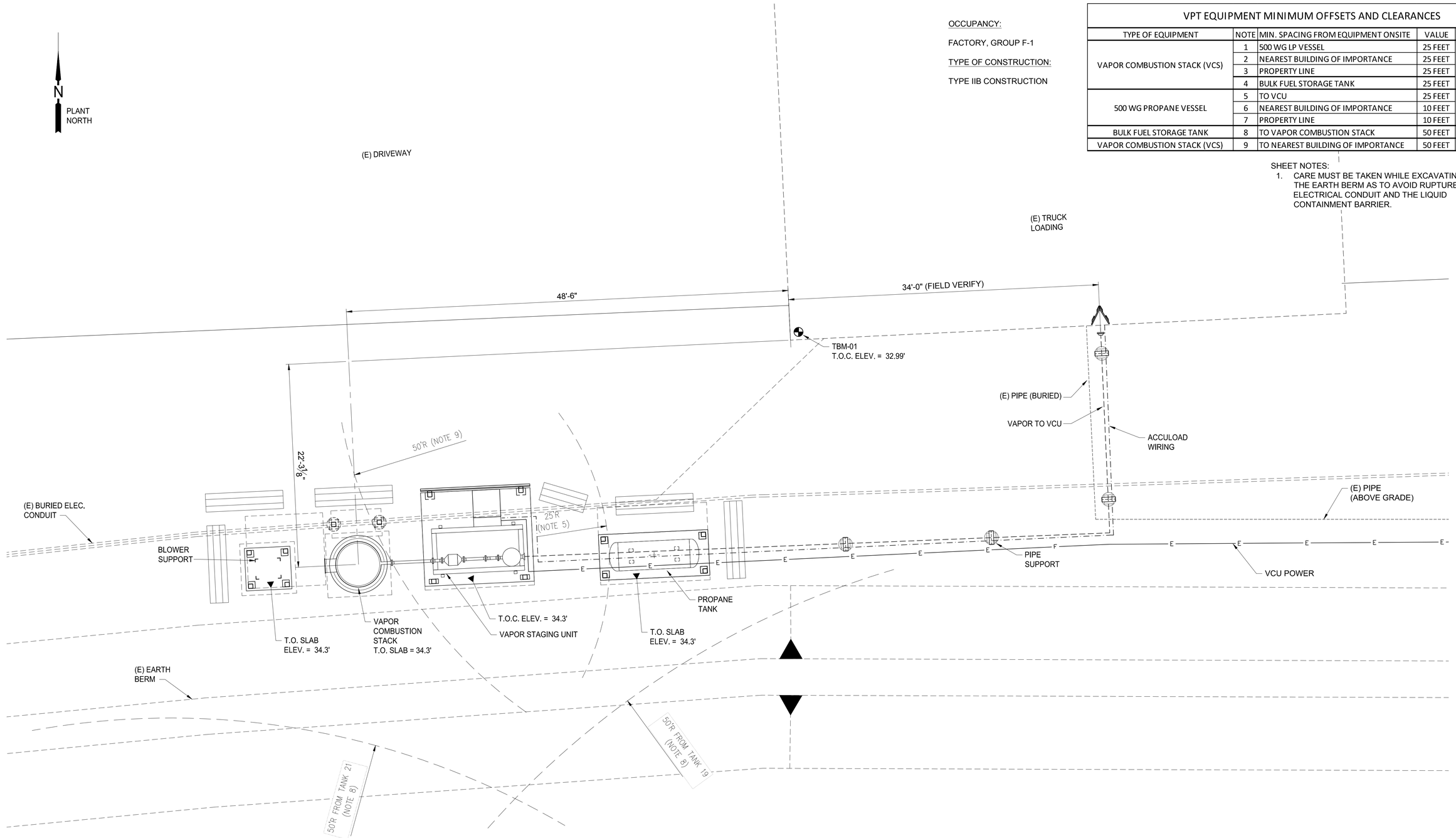

1 ENLARGED SITE PLAN
1/2" = 10'-0"

REFERENCE DRAWINGS	
DRAWING	DRAWING TITLE

STATE OF ALASKA 49TH Andrew P. Adams No. SE13603 REGISTERED PROFESSIONAL ENGINEER 9/17/19

GREAT NORTHERN ENGINEERING
137 E. ARCTIC, SUITE 101
PALMER, AK 99645
(907) 745-6988

REVISIONS				
REV.	DATE	BY	APP'D.	DESCRIPTION
0	09/06/19	JM	AA	ISSUED FOR CONSTRUCTION
1	09/12/19	JM	AA	ISSUED FOR CONSTRUCTION
2	09/17/19	EK	AA	ISSUED FOR CONSTRUCTION

SCALE	1" = 10'	MO	DAY	YR
DRAWN	E. KOPPANA	08	08	19
CHK'D				
APP'D				
APP'D				
APPROVED				
DATE				
PROJECT				

PETRO STAR
VALDEZ PETROLEUM TERMINAL

VPT INFRASTRUCTURE - VCU PROJECT
CIVIL/STRUCTURAL - SITE PLAN
VCU-6900, V-6919 & TRUCK RACK AREAS

DRAWING NUMBER 70-C-SP-122824-02-02 REV. 2

U:\2019 Jobs\309090 VPT Infrastructure Project - VCU - Petrostar\DIR-5\Civil-Structural\70-C-SP-122824-02-02.dwg, 70-C-SP-122824-02-02, 9/17/2019 5:09:21 PM

SHEET NOTES:

1. CONTRACTOR TO VERIFY PROPER SITE DRAINAGE UPON PROJECT COMPLETION.
2. AFTER INSTALLATION CONTRACTOR SHALL MATCH EXISTING GRADES TO PROVIDE CONTINUED POSITIVE DRAINAGE AWAY FROM EXISTING AND NEW INFRASTRUCTURE. CONTRACTOR TO BLEND GRADES AS NEEDED OR OTHERWISE DIRECTED BY THE OWNER'S REPRESENTATIVE.

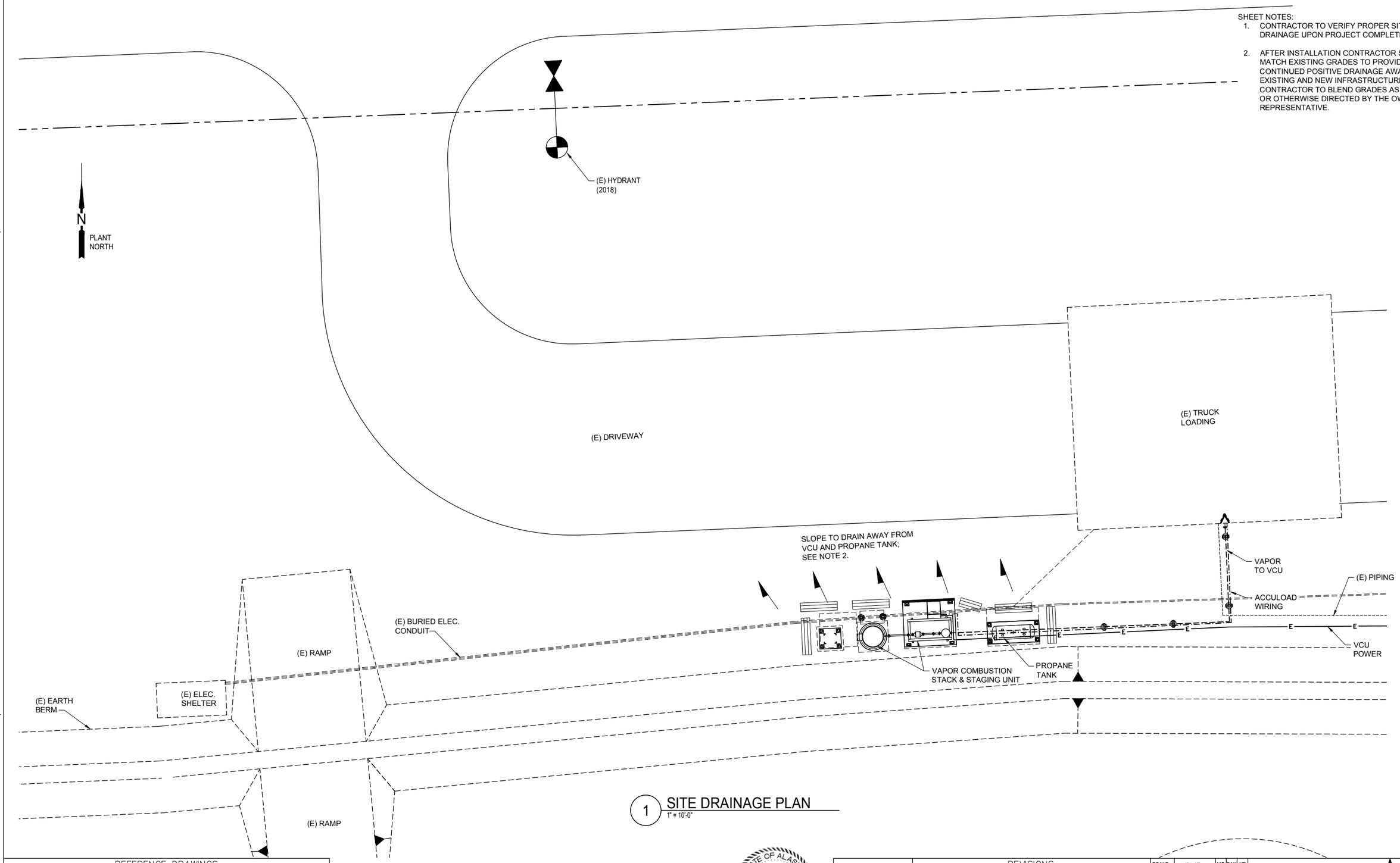

1 SITE DRAINAGE PLAN
1" = 10'-0"

REFERENCE DRAWINGS	
DRAWING	DRAWING TITLE

STATE OF ALASKA 49TH Andrew P. Adams 9/12/19 REGISTERED PROFESSIONAL ENGINEER

GREAT NORTHERN ENGINEERING
137 E. ARCTIC, SUITE 101
PALMER, AK 99645
(907) 745-6988

REVISIONS

REV.	DATE	BY	APP'D.	DESCRIPTION
0	09/06/19	JM	AA	ISSUED FOR CONSTRUCTION
1	09/12/19	JM	AA	ISSUED FOR CONSTRUCTION

SCALE	1" = 10'	MO	DAY	YR
DRAWN	E. KOPPANA	08	08	19
CHK'D				
APP'D				
APP'D				
APPROVED				
DATE				
PROJECT				

PETRO STAR
VALDEZ PETROLEUM TERMINAL

VPT INFRASTRUCTURE - VCU PROJECT
CIVIL - SITE DRAINAGE PLAN
VCU-6900, V-6919 & TRUCK RACK AREAS

DRAWING NUMBER 70-C-SDP-122824-02-01 REV. 1

NOTES:

N1 CONTRACTOR SHALL COORDINATE ACTUAL SIZE AND LOCATION OF ANCHOR BOLTS AND BASE PLATES WITH VAPOR COMBUSTION UNIT MANUFACTURER PRIOR TO INSTALLATION OF CONCRETE FOOTINGS. PRIOR TO CONSTRUCTION ANY INCONSISTENCIES SHALL BE REPORTED TO STRUCTURAL ENGINEER.

N2 CONTRACTOR SHALL PROVIDED GROOVES IN TOP OF STACK FOUNDATION SLAB TO PROVIDE POSITIVE DRAINAGE ACROSS SURFACE OF SLAB. MINIMUM DEPTH: 0-INCH, MAXIMUM DEPTH: 1-INCH.

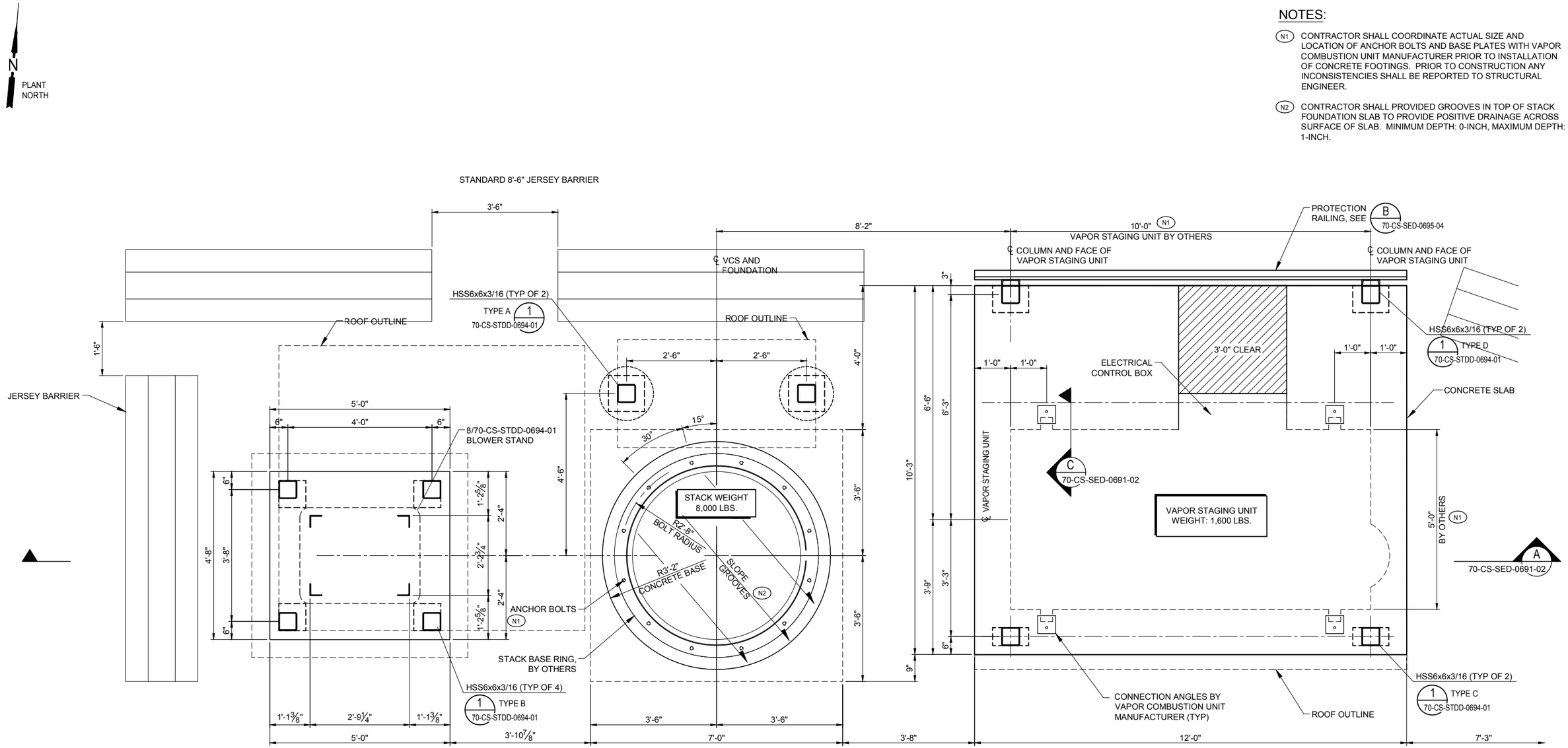

1 FOUNDATION PLAN
SCALE: 3/4" = 1'-0"

REFERENCE DRAWINGS	
DRAWING	DRAWING TITLE

STATE OF ALASKA 49TH Andrew P. Adams No. SE13603 9/12/19

GREAT NORTHERN ENGINEERING
137 E. ARCTIC, SUITE 101
PALMER, AK 99645
(907) 745-6988
GNE # 309090

REVISIONS				
REV.	DATE	BY	APP'D.	DESCRIPTION
0	09/06/19	JM	AA	ISSUED FOR CONSTRUCTION
1	09/12/19	JM	AA	ISSUED FOR CONSTRUCTION

SCALE		MO	DAY	YR
DRAWN	J. MCCLAIN	08	06	19
CHK'D				
APP'D				
APP'D				
APPROVED				
DATE				
PROJECT				

PETRO STAR
VALDEZ PETROLEUM TERMINAL

VPT INFRASTRUCTURE - VCU PROJECT
CIVIL/STRUCTURAL - PLAN VIEW
VCU-6900 FOUNDATIONS

DRAWING NUMBER 70-CS-PVW-0691-01 REV. 1

NOTES:

(N1) CONTRACTOR SHALL COORDINATE ACTUAL SIZE AND LOCATION OF ANCHOR BOLTS AND BASE PLATES WITH COMBUSTION UNIT MANUFACTURER PRIOR TO INSTALLATION OF CONCRETE FOOTINGS AND PILASTERS.

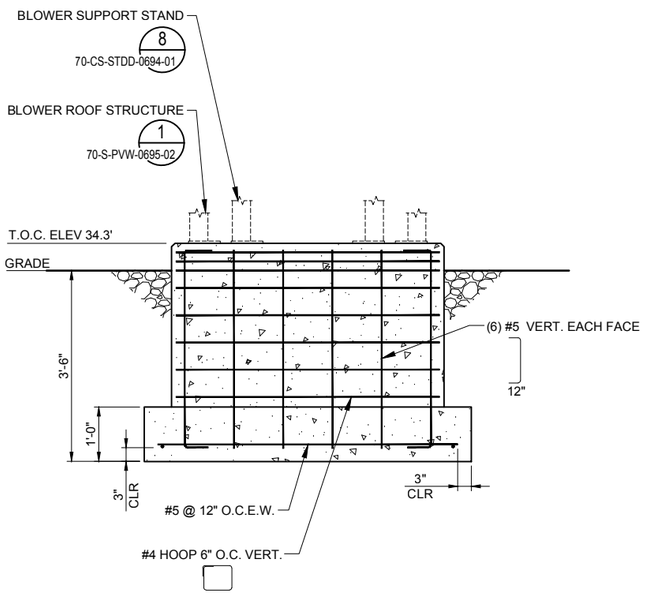

VCU BLOWER

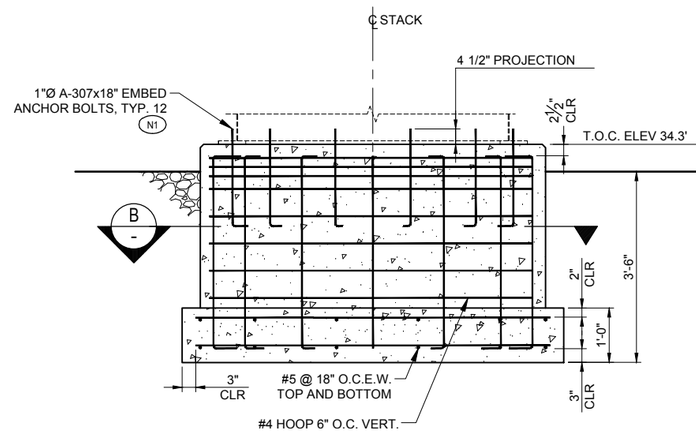

VAPOR COMBUSTION STACK

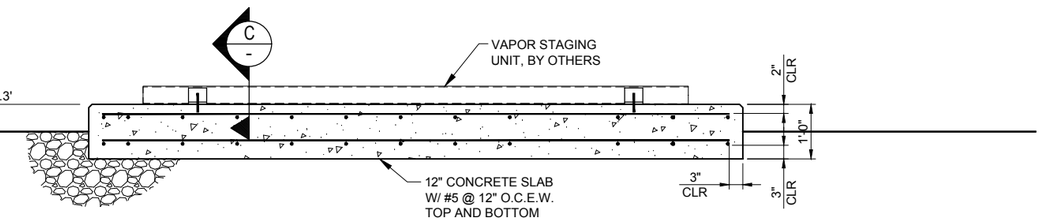

VAPOR STAGING UNIT

A FOUNDATION SECTION
SCALE: 3/4" = 1'-0"

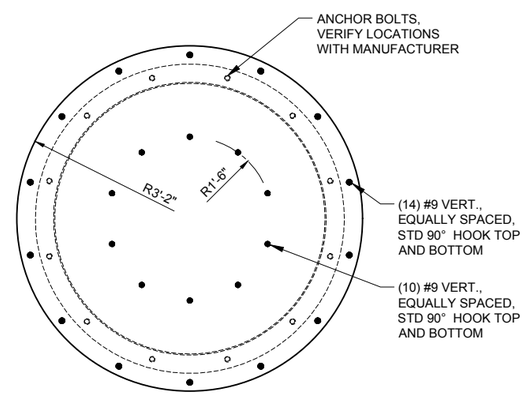

B PIER SECTION
SCALE: 3/4" = 1'-0"

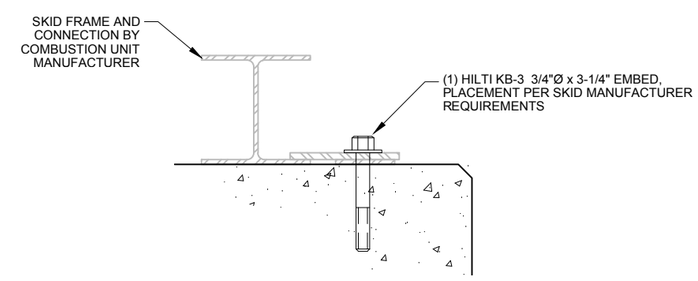

SECTION C
3" = 1'-0" 70-CS-SED-0691-02

REFERENCE DRAWINGS	
DRAWING	DRAWING TITLE

STATE OF ALASKA 49TH Andrew P. Adams No. SE13603 REGISTERED PROFESSIONAL ENGINEER 9/12/19

GREAT NORTHERN ENGINEERING
137 E. ARCTIC, SUITE 101
PALMER, AK 99645
(907) 745-6988
GNE # 309090

REVISIONS

REV.	DATE	BY	APP'D.	DESCRIPTION
0	09/06/19	JM	AA	ISSUED FOR CONSTRUCTION
1	09/12/19	JM	AA	ISSUED FOR CONSTRUCTION

		MO	DAY	YR
SCALE				
DRAWN	J. MCCLAIN	08	06	19
CHK'D				
APP'D				
APP'D				
APPROVED				
DATE				
PROJECT				

PETRO STAR
VALDEZ PETROLEUM TERMINAL

VPT INFRASTRUCTURE - VCU PROJECT
CIVIL/STRUCTURAL - SECTIONS
VCU-6900 FOUNDATIONS

DRAWING NUMBER 70-CS-SED-0691-02 REV. 1

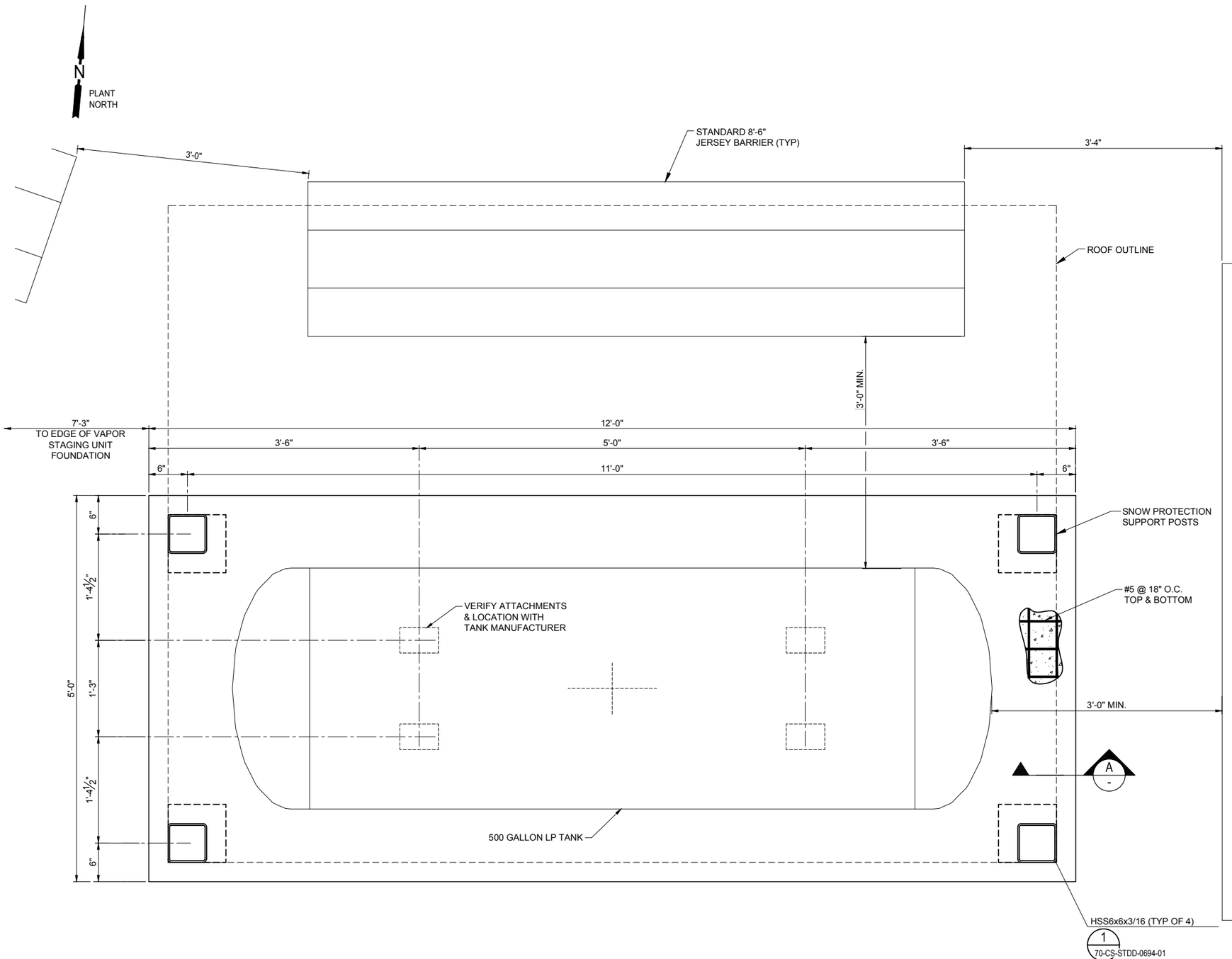

1 PROPANE TANK FOUNDATION
SCALE: 1-1/2" = 1'-0"

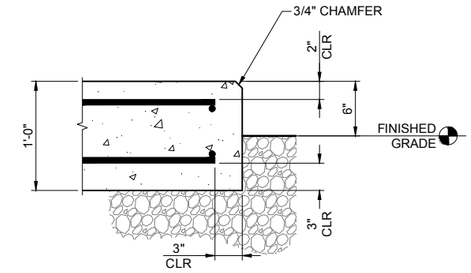

SECTION A
1-1/2" = 1'-0"

REFERENCE DRAWINGS	
DRAWING	DRAWING TITLE

STATE OF ALASKA 49TH Andrew P. Adams No. SE13603 REGISTERED PROFESSIONAL ENGINEER 9/12/19

GREAT NORTHERN ENGINEERING
137 E. ARCTIC, SUITE 101
PALMER, AK 99645
(907) 745-6988
GNE # 309090

REVISIONS

REV.	DATE	BY	APP'D.	DESCRIPTION
0	09/06/19	JM	AA	ISSUED FOR CONSTRUCTION
1	09/12/19	JM	AA	ISSUED FOR CONSTRUCTION

		MO	DAY	YR
SCALE				
DRAWN	J. MCCLAIN	08	06	19
CHK'D				
APP'D				
APP'D				
APPROVED				
DATE				
PROJECT				

PETRO STAR
VALDEZ PETROLEUM TERMINAL

VPT INFRASTRUCTURE - VCU PROJECT
CIVIL/STRUCTURAL - PLAN VIEW
V-6919 FOUNDATION

DRAWING NUMBER 70-CS-PVW-0692-01 REV. 1

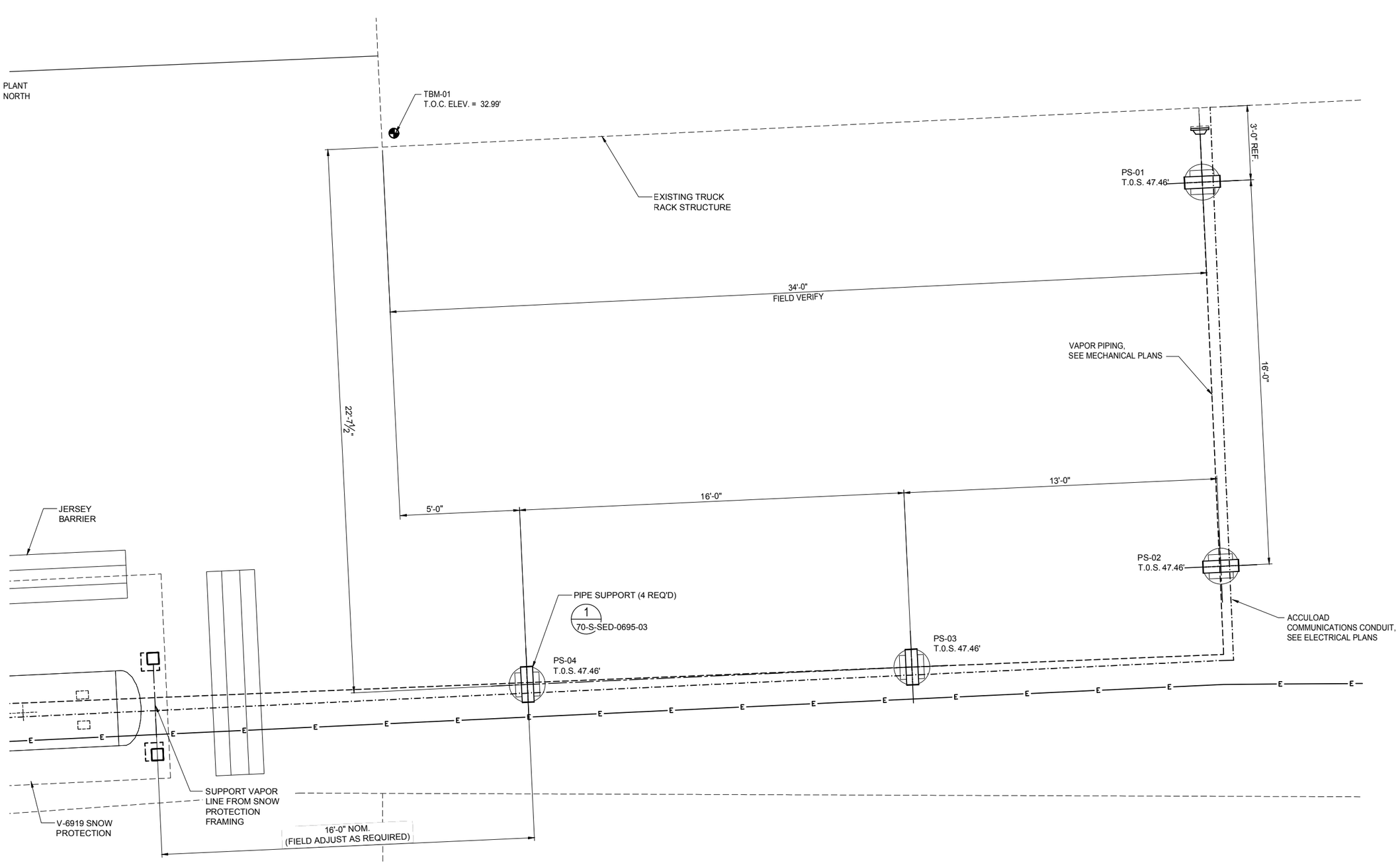

1 PIPE SUPPORT PLAN
SCALE: 1/2" = 1'-0"

REFERENCE DRAWINGS	
DRAWING	DRAWING TITLE

STATE OF ALASKA
49 TH
Andrew P. Adams
No. SE13603
REGISTERED PROFESSIONAL ENGINEER
9/12/19

GREAT NORTHERN ENGINEERING
137 E. ARCTIC, SUITE 101
PALMER, AK 99645
(907) 745-6988
GNE # 309090

REVISIONS				
REV.	DATE	BY	APP'D.	DESCRIPTION
0	09/06/19	JM	AA	ISSUED FOR CONSTRUCTION

SCALE		MO	DAY	YR
DRAWN	J. MCCLAIN	08	15	19
CHK'D				
APP'D				
APP'D				
APPROVED				
DATE				
PROJECT				

PETRO STAR
VALDEZ PETROLEUM TERMINAL

VPT INFRASTRUCTURE - VCU PROJECT
CIVIL/STRUCTURAL - PLAN VIEW
VAPOR LINE SUPPORTS

DRAWING NUMBER 70-S-PED-0693-01 REV. 0

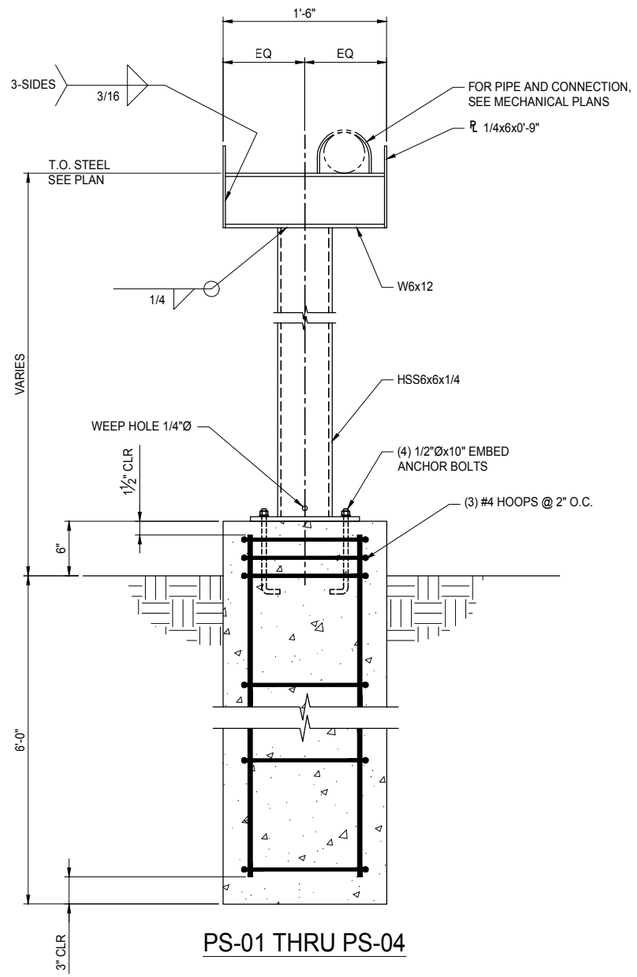

1 PIPE SUPPORT
SCALE: 1 1/2" = 1'-0"

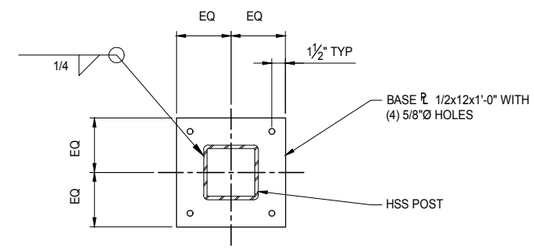

2 PIPE SUPPORT BASE PLATE
SCALE: 1 1/2" = 1'-0"

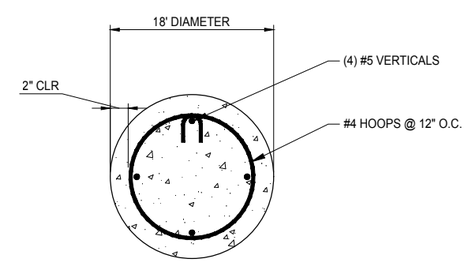

3 PIPE SUPPORT FOOTING
SCALE: 1 1/2" = 1'-0"

REFERENCE DRAWINGS	
DRAWING	DRAWING TITLE

STATE OF ALASKA
49 TH
Andrew P. Adams
No. SE13603
9/12/19

GREAT NORTHERN ENGINEERING
137 E. ARCTIC, SUITE 101
PALMER, AK 99645
(907) 745-6988
GNE # 309090

REVISIONS				
REV.	DATE	BY	APP'D.	DESCRIPTION
0	09/06/19	JM	AA	ISSUED FOR CONSTRUCTION

SCALE		MO	DAY	YR
DRAWN	J. MCCLAIN	08	15	19
CHK'D				
APP'D				
APP'D				
APPROVED				
DATE				
PROJECT				

PETRO STAR
VALDEZ PETROLEUM TERMINAL

VPT INFRASTRUCTURE - VCU PROJECT
STRUCTURAL - SECTIONS & DETAILS
PIPE SUPPORTS

DRAWING NUMBER 70-S-SED-0693-02 REV. 0

NOTE:
VERIFY BOLT LAYOUT AND T.O. STEEL SUPPORT REQUIREMENTS WITH FINAL VCU BLOWER INFORMATION. REPORT ANY INCONSISTENCIES TO STRUCTURAL ENGINEER PRIOR TO FABRICATION.

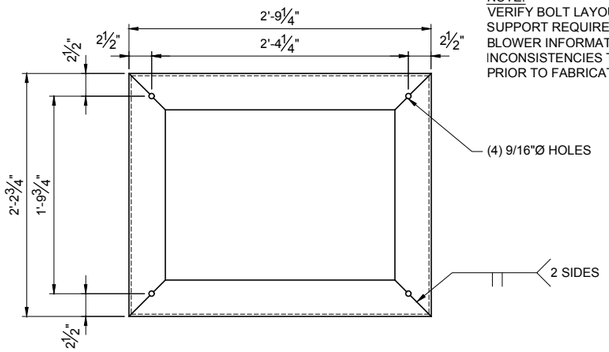

TOP PLAN

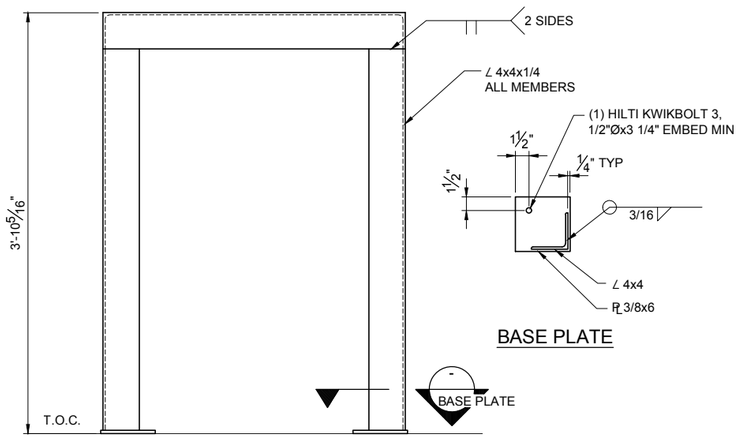

SIDE VIEW

DETAIL 8
1-1/2" = 1'-0" 70-S-SED-0695-03

NOT USED

DETAIL 6
N.T.S. 70-S-SED-0695-03

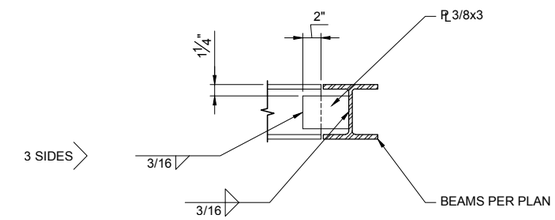

DETAIL 2
1-1/2" = 1'-0" 70-S-SED-0695-03

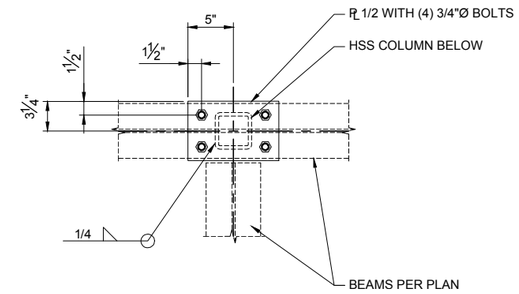

DETAIL 3
1-1/2" = 1'-0" 70-S-SED-0695-03

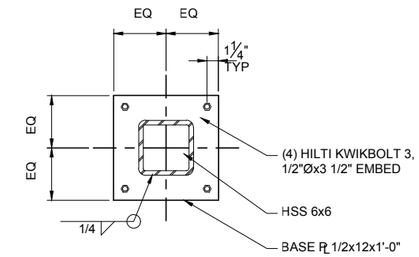

TYPE A

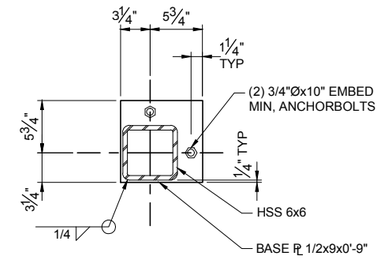

TYPE B

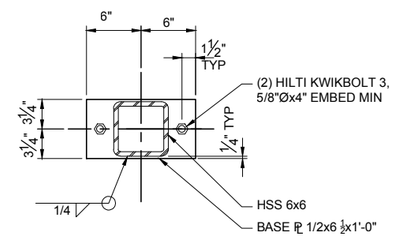

TYPE C

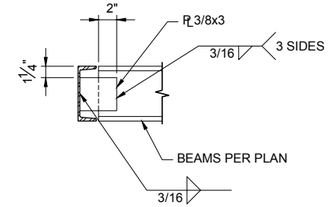

DETAIL 4
1-1/2" = 1'-0" 70-S-SED-0695-03

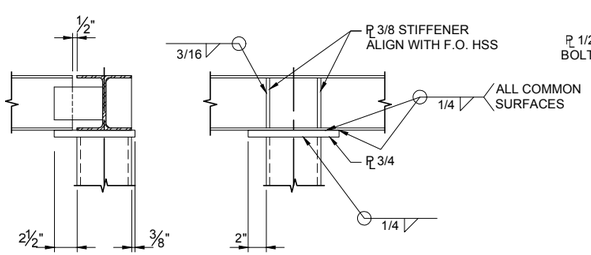

DETAIL 9
1-1/2" = 1'-0" 70-S-SED-0695-03

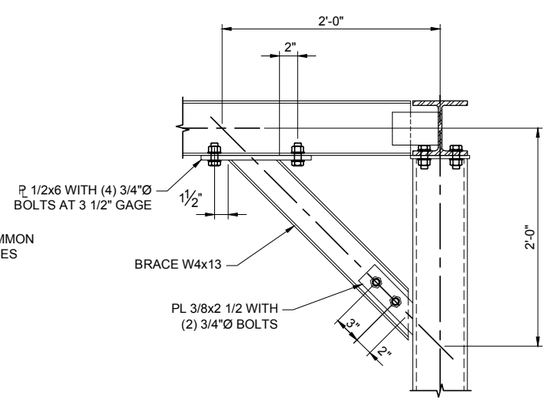

DETAIL 7
1-1/2" = 1'-0" 70-S-SED-0695-03

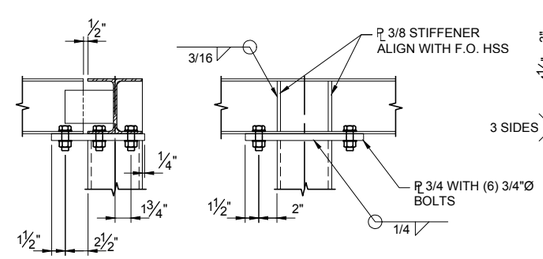

DETAIL 5
1-1/2" = 1'-0" 70-S-SED-0695-03

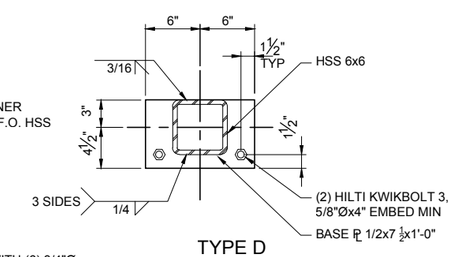

TYPE D

DETAIL 1
1-1/2" = 1'-0" 70-S-SED-0695-03

REFERENCE DRAWINGS

DRAWING	DRAWING TITLE

STATE OF ALASKA 49TH Andrew P. Adams No. SE13603 9/12/19

GREAT NORTHERN ENGINEERING
137 E. ARCTIC, SUITE 101
PALMER, AK 99645
(907) 745-6988

REVISIONS

REV.	DATE	BY	APP'D.	DESCRIPTION
0	09/06/19	JM	AA	ISSUED FOR CONSTRUCTION
1	09/12/19	JM	AA	ISSUED FOR CONSTRUCTION

		MO	DAY	YR
SCALE	1" = 10'			
DRAWN	J. MCCLAIN	08	16	19
CHK'D				
APP'D				
APP'D				
APPROVED				
DATE				
PROJECT				

PETRO STAR
VALDEZ PETROLEUM TERMINAL

VPT INFRASTRUCTURE - VCU PROJECT
CIVIL/STRUCTURAL - STANDARD DETAILS
VCU-6900, V-6919 & TRUCK RACK AREAS

DRAWING NUMBER 70-CS-STDD-0694-01 REV. 1

NOTES:

(N1) CONTRACTOR SHALL INSTALL SNOW CLEATS IN ACCORDANCE WITH MANUFACTURER'S INSTALLATION INSTRUCTIONS. SNOW CLEATS SHALL BE BERGER SNOW GUARD #100 SHOE OR OTHER OWNER SELECTED.

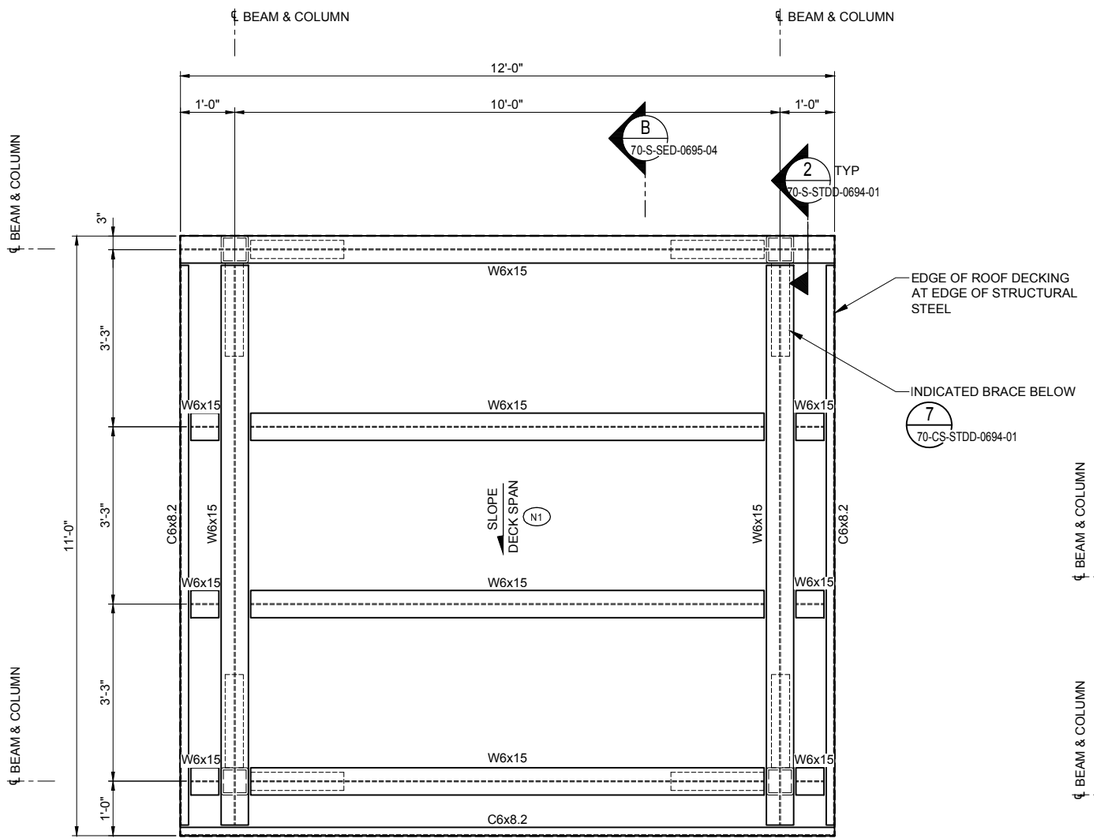

VAPOR STAGING UNIT

1 VCU-6900
SCALE: 3/4" = 1'-0"

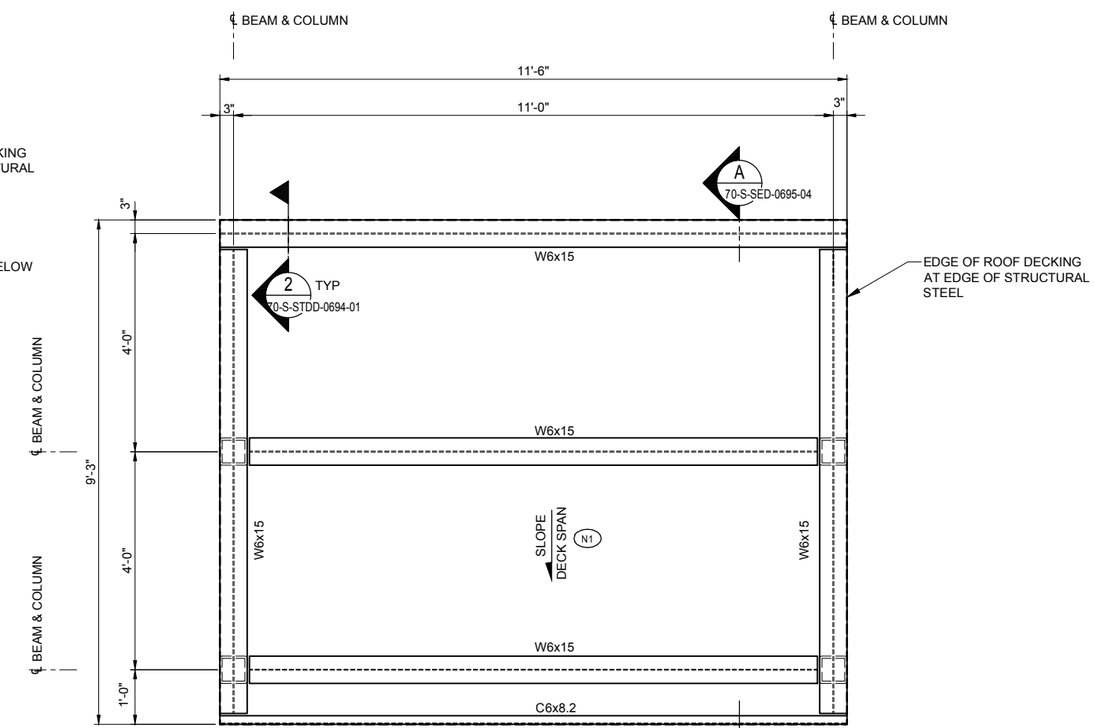

PROPANE TANK

2 V-6919
SCALE: 3/4" = 1'-0"

REFERENCE DRAWINGS	
DRAWING	DRAWING TITLE

STATE OF ALASKA 49TH Andrew P. Adams No. SE13603 REGISTERED PROFESSIONAL ENGINEER 9/12/19

GREAT NORTHERN ENGINEERING
137 E. ARCTIC, SUITE 101
PALMER, AK 99645
(907) 745-6988
GNE # 309090

REVISIONS				
REV.	DATE	BY	APP'D.	DESCRIPTION
0	09/06/19	JM	AA	ISSUED FOR CONSTRUCTION

SCALE		MO	DAY	YR
DRAWN	J. MCCLAIN	08	15	19
CHK'D				
APP'D				
APP'D				
APPROVED				
DATE				
PROJECT				

PETRO STAR
VALDEZ PETROLEUM TERMINAL

VPT INFRASTRUCTURE - VCU PROJECT
STRUCTURAL - PLAN VIEW
VCU-6900 & V-6919 SNOW PROTECTION

DRAWING NUMBER 70-S-PVW-0695-01 REV. 0

NOTES:

(N1) CONTRACTOR SHALL INSTALL SNOW CLEATS IN ACCORDANCE WITH MANUFACTURER'S INSTALLATION INSTRUCTIONS. SNOW CLEATS SHALL BE BERGER SNOW GUARD #100 SHOE OR OTHER OWNER SELECTED.

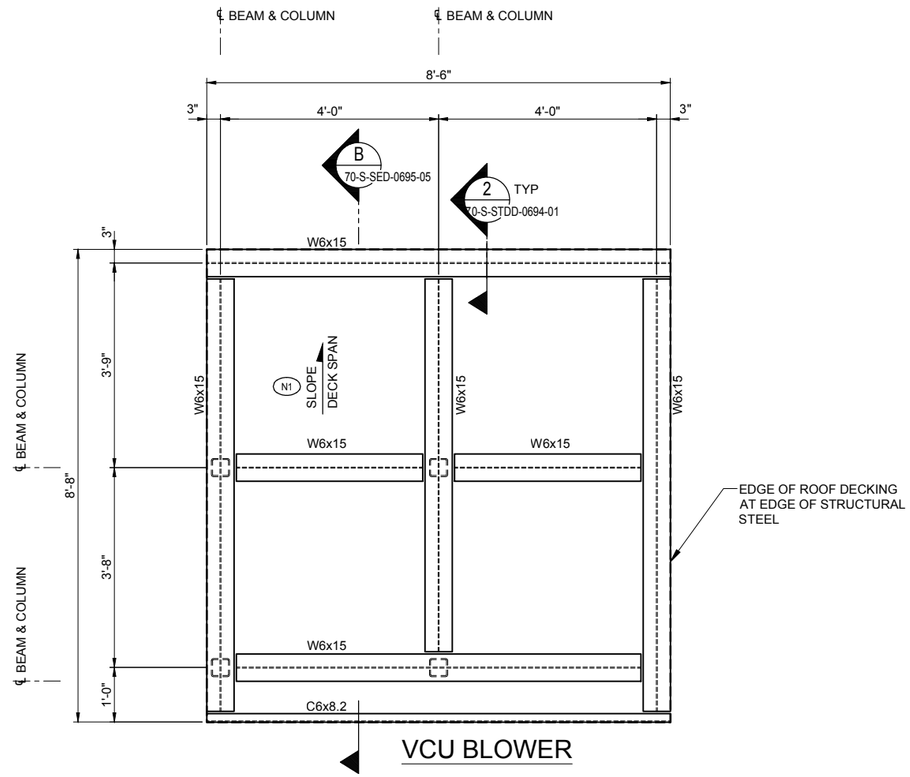

VCU BLOWER

1 VCU-6900 PLAN
SCALE: 3/4" = 1'-0"

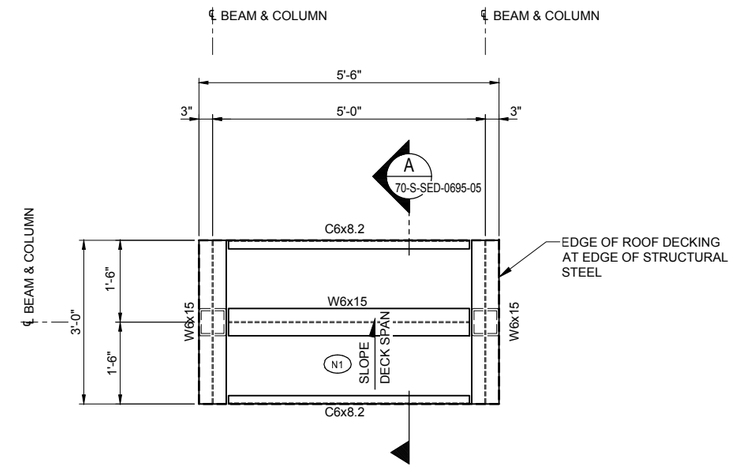

VAPOR COMBUSTION STACK - DAMPER

2 VCU-6900
SCALE: 3/4" = 1'-0"

REFERENCE DRAWINGS	
DRAWING	DRAWING TITLE

STATE OF ALASKA 49TH Andrew P. Adams No. SE13603 REGISTERED PROFESSIONAL ENGINEER
9/12/19

GREAT NORTHERN ENGINEERING
137 E. ARCTIC, SUITE 101
PALMER, AK 99645
(907) 745-6988
GNE # 309090

REVISIONS				
REV.	DATE	BY	APP'D.	DESCRIPTION
0	09/06/19	JM	AA	ISSUED FOR CONSTRUCTION

SCALE		MO	DAY	YR
DRAWN	J. MCCLAIN	08	15	19
CHK'D				
APP'D				
APP'D				
APPROVED				
DATE				
PROJECT				

PETRO STAR
VALDEZ PETROLEUM TERMINAL

VPT INFRASTRUCTURE - VCU PROJECT
STRUCTURAL - PLAN VIEW
VCU-6900 SNOW PROTECTION

DRAWING NUMBER 70-S-PVW-0695-02 REV. 0

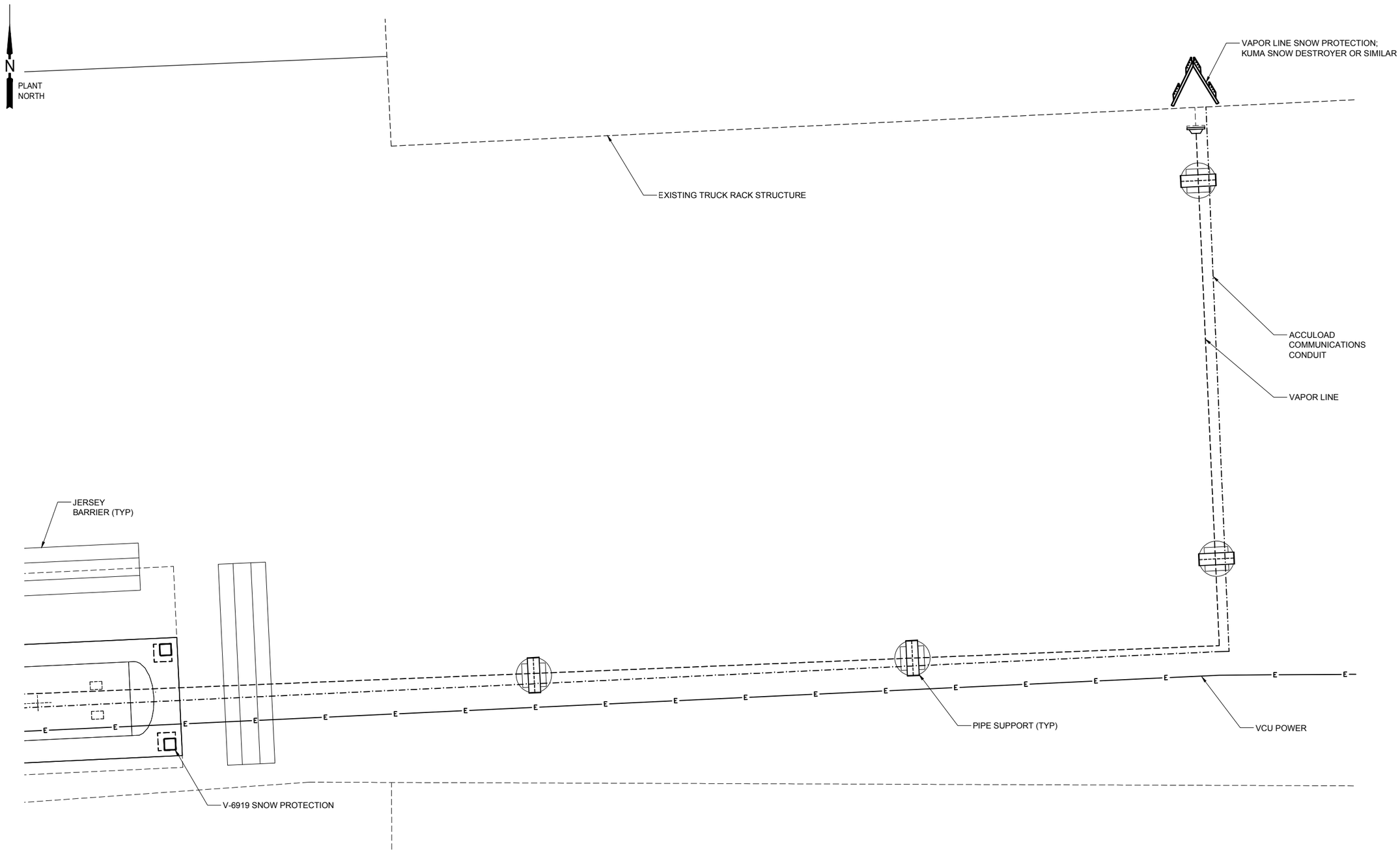

1 VAPOR LINE AT TRUCK RACK
SCALE: 1/2" = 1'-0"

REFERENCE DRAWINGS	
DRAWING	DRAWING TITLE

STATE OF ALASKA 49TH Andrew P. Adams No. SE13603 REGISTERED PROFESSIONAL ENGINEER
9/12/19

GREAT NORTHERN ENGINEERING
137 E. ARCTIC, SUITE 101
PALMER, AK 99645
(907) 745-6988
GNE # 309090

REVISIONS				
REV.	DATE	BY	APP'D.	DESCRIPTION
0	09/06/19	JM	AA	ISSUED FOR CONSTRUCTION

SCALE		MO	DAY	YR
DRAWN	J. MCCLAIN	08	15	19
CHK'D				
APP'D				
APP'D				
APPROVED				
DATE				
PROJECT				

PETRO STAR
VALDEZ PETROLEUM TERMINAL

VPT INFRASTRUCTURE - VCU PROJECT
STRUCTURAL - PLAN VIEW
VAPOR LINE SNOW PROTECTION

DRAWING NUMBER 70-S-PVW-0695-03 REV. 0

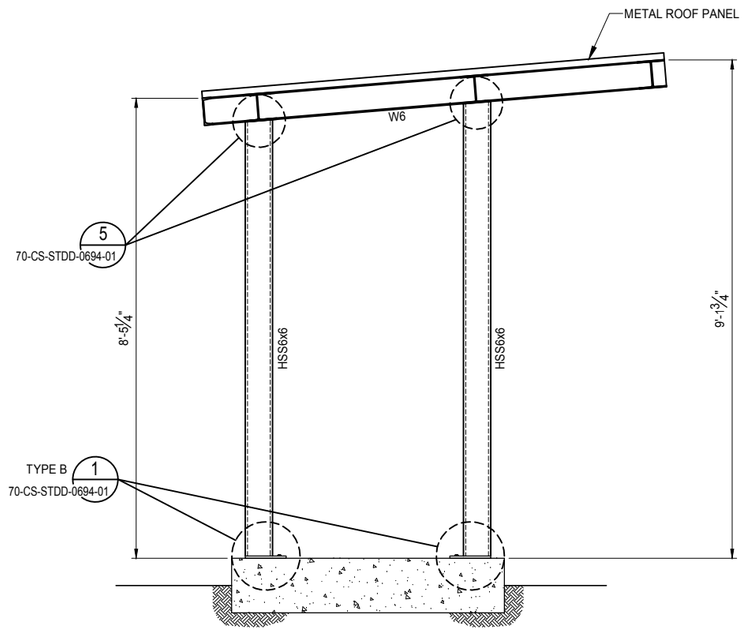

A V-6919 PROPANE TANK
SCALE: 3/4" = 1'-0"

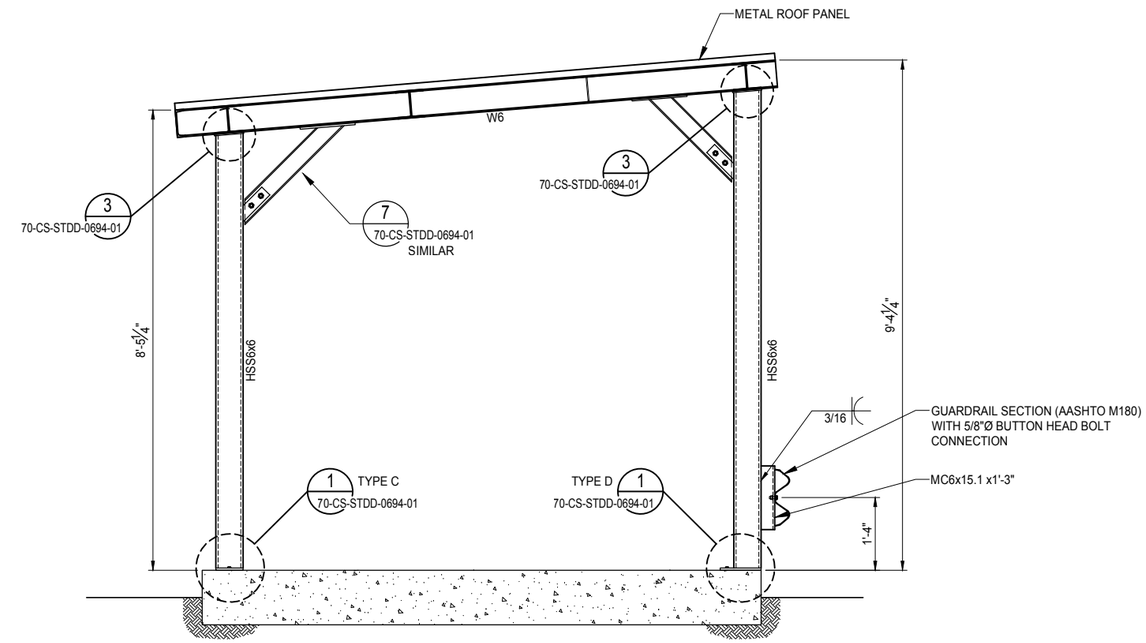

B VCU-6900 STAGING UNIT
SCALE: 3/4" = 1'-0"

REFERENCE DRAWINGS

DRAWING	DRAWING TITLE

STATE OF ALASKA
49 TH
Andrew P. Adams
No. SE13603
9/12/19

GREAT NORTHERN ENGINEERING
137 E. ARCTIC, SUITE 101
PALMER, AK 99645
(907) 745-6988
GNE # 309090

REVISIONS

REV.	DATE	BY	APP'D.	DESCRIPTION
0	09/06/19	JM	AA	ISSUED FOR CONSTRUCTION
1	09/12/19	JM	AA	ISSUED FOR CONSTRUCTION

		MO	DAY	YR
SCALE				
DRAWN	J. MCCLAIN	08	15	19
CHK'D				
APP'D				
APP'D				
APPROVED				
DATE				
PROJECT				

PETRO STAR
VALDEZ PETROLEUM TERMINAL

VPT INFRASTRUCTURE - VCU PROJECT
STRUCTURAL - SECTIONS & DETAILS
VCU-6900 & V-6919 SNOW PROTECTION

DRAWING NUMBER 70-S-SED-0695-04 REV. 0

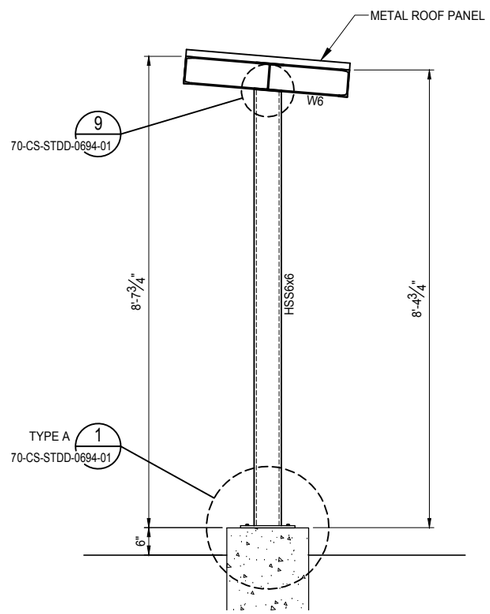

A VCU-6900 DAMPER
SCALE: 3/4" = 1'-0"

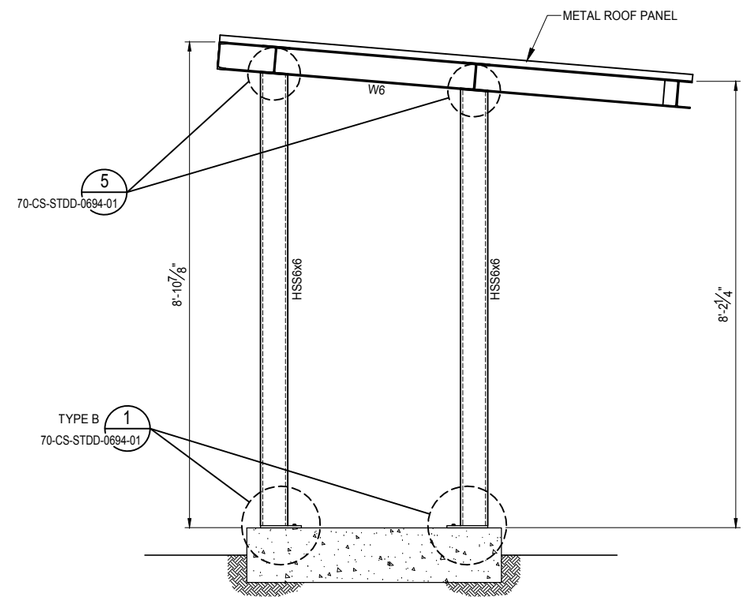

B VCU-6900 BLOWER
SCALE: 3/4" = 1'-0"

REFERENCE DRAWINGS	
DRAWING	DRAWING TITLE

STATE OF ALASKA
49 TH
Andrew P. Adams
No. SE13603
REGISTERED PROFESSIONAL ENGINEER
9/12/19

GREAT NORTHERN ENGINEERING
137 E. ARCTIC, SUITE 101
PALMER, AK 99645
(907) 745-6988
GNE # 309090

REVISIONS				
REV.	DATE	BY	APP'D.	DESCRIPTION
0	09/06/19	JM	AA	ISSUED FOR CONSTRUCTION

SCALE		MO	DAY	YR
DRAWN	J. MCCLAIN	08	15	19
CHK'D				
APP'D				
APP'D				
APPROVED				
DATE				
PROJECT				

PETRO STAR
VALDEZ PETROLEUM TERMINAL

VPT INFRASTRUCTURE - VCU PROJECT
STRUCTURAL - SECTIONS & DETAILS
VCU-6900 SNOW PROTECTION

DRAWING NUMBER 70-S-SED-0695-05 REV. 0

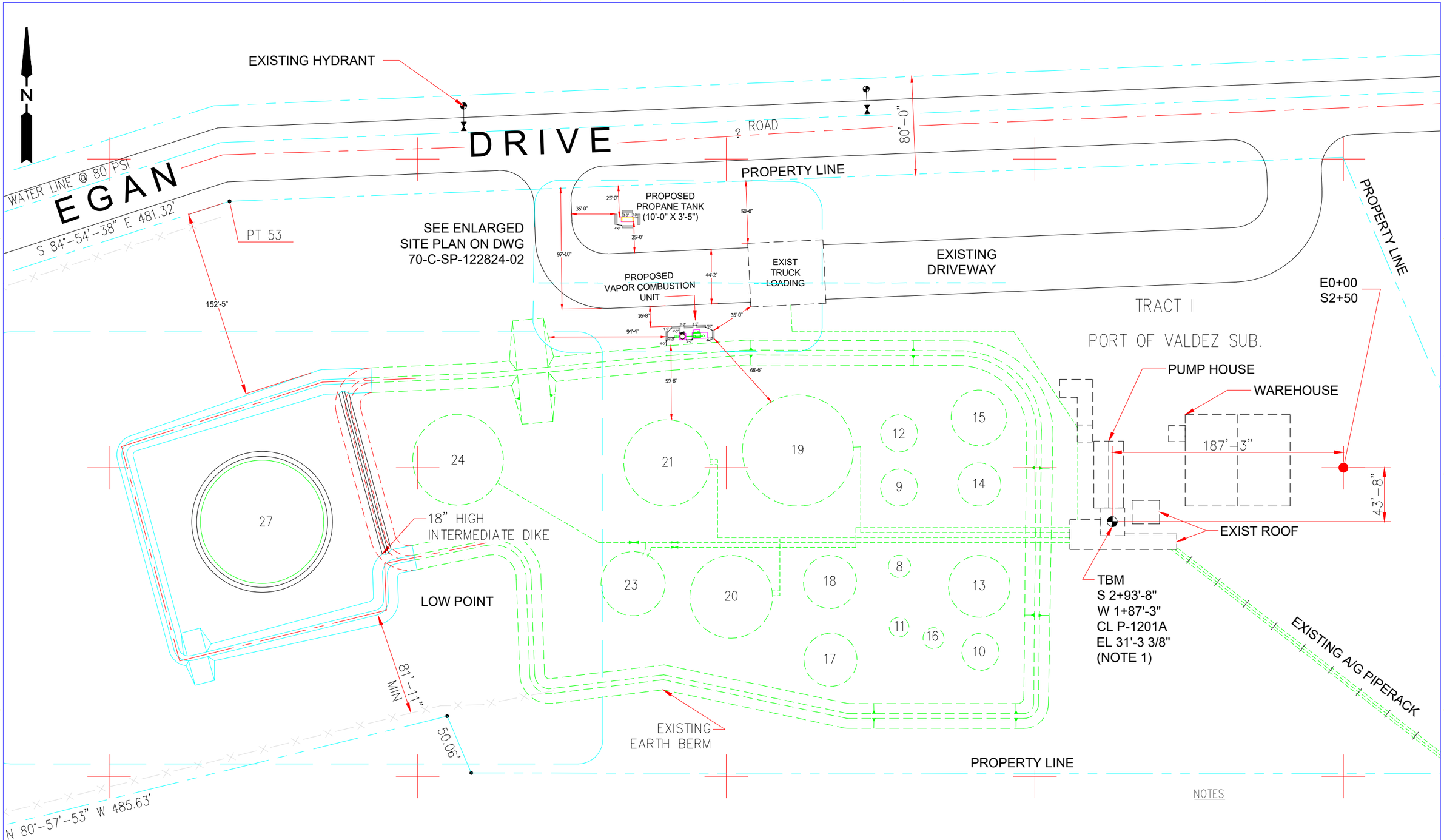

NOTES

REFERENCE DRAWINGS	
DRAWING	DRAWING TITLE
70-C-SP-0015-01	CIVIL – SITE PLAN ENLARGED SITE PLAN – WEST
70-D-5005A	PUMP HOUSE AREA PIPING PLAN CARGO PUMPS / FILTERS
70-D-5005B	PUMP HOUSE AREA PIPING SECTIONS AND DETAILS

REVISIONS				
REV.	DATE	BY	APP'D.	DESCRIPTION
0	07/29/19	LAK		VCU Proposed Site Plan

SCALE	1"=60'-0"	MO	DAY	YR
DRAWN				
CHK'D				
APP'D				
APP'D				
APPROVED				
DATE				
PROJECT	122824			

PETRO STAR
VALDEZ PETROLEUM TERMINAL

VPT INFRASTRUCTURE ADDITION
CIVIL – SITE PLAN
OVERALL FACILITY

DRAWING NO. 70-C-SP-122824-01 REV. A

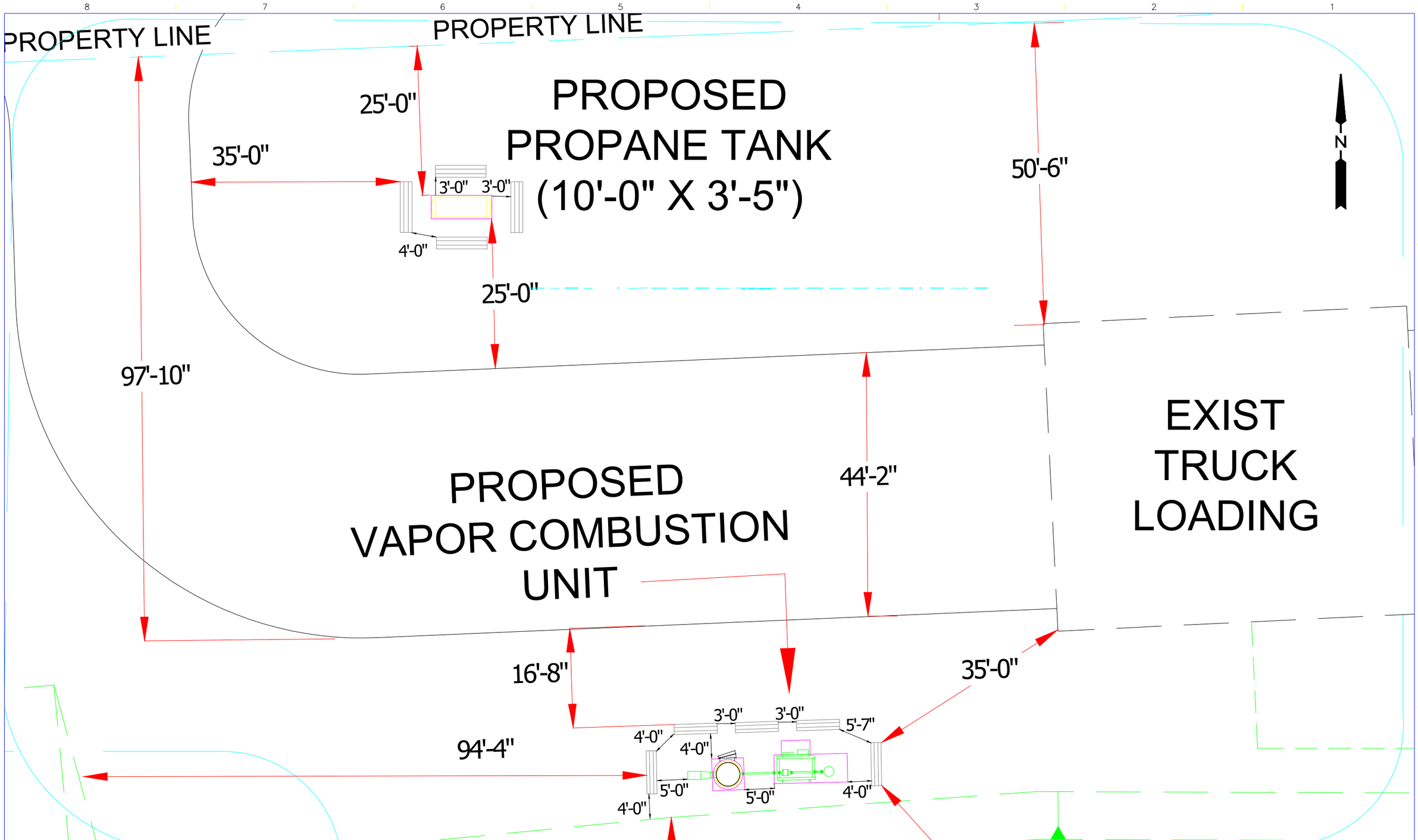

REFERENCE DRAWINGS	
DRAWING	DRAWING TITLE
70-C-SP-0015-01	CIVIL – SITE PLAN ENLARGED SITE PLAN – WEST
70-D-5005A	PUMP HOUSE AREA PIPING PLAN CARGO PUMPS / FILTERS
70-D-5005B	PUMP HOUSE AREA PIPING SECTIONS AND DETAILS

REVISIONS				
REV.	DATE	BY	APP'D.	DESCRIPTION
A	07/30/2019	LAK		VCU Proposed Site Plan

SCALE	1"=60'-0"	MO	DAY	YR
DRAWN	CFG	07	29	19
CHK'D				
APP'D				
APP'D				
APPROVED				
DATE				
PROJECT				

PETRO STAR
VALDEZ PETROLEUM TERMINAL

VPT INFRASTRUCTURE ADDITION
CIVIL – ENLARGED SITE PLAN
VAPOR COMBUTION UNIT AREA

DRAWING NO. 70-C-SP-122824-02 REV. A