VALDEZ ANIMAL SHELTER
KENNEL RENOVATION
PROJECT 16-350-1606

CITY OF VALDEZ
VALDEZ, ALASKA

ISSUED FOR PERMIT
JANUARY 11, 2019

LOCATION MAP

N

NOT TO SCALE

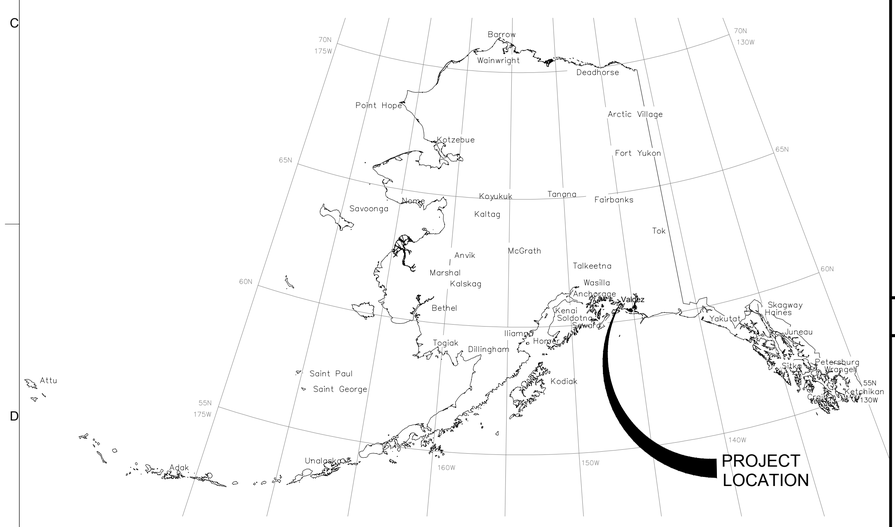

VICINITY MAP

N

NOT TO SCALE

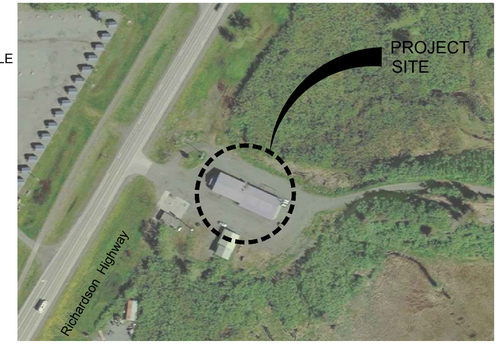

KEY PLAN

N

NOT TO SCALE

VALDEZ ANIMAL SHELTER

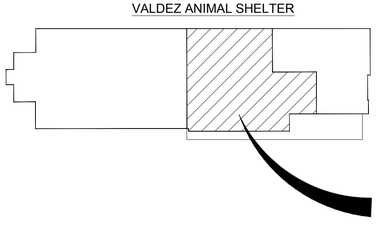

DRAWING INDEX

DISCIPLINE	SHEET TITLE
GENERAL	
G-001	COVER SHEET, LOCATION MAP, VICINITY MAP, KEY PLAN, DRAWING INDEX
G-002	CODE ANALYSIS AND LIFE SAFETY PLAN
DEMOLITION	
AD101	KENNEL FLOOR PLAN - DEMO
AD401	KENNEL AREA ELEVATIONS - DEMO
AD402	KENNEL AREA ELEVATIONS - DEMO
ARCHITECTURAL	
A-001	GENERAL NOTES, ASSEMBLIES, LEGEND, MATERIALS AND ABBREVIATIONS
A-101	KENNEL FLOOR PLAN NEW LAYOUT
A-301	WALL SECTIONS
A-302	WALL SECTIONS, STRUCTURAL DETAILS, AND STRUCTURAL NOTES
A-401	INTERIOR ELEVATIONS, ROOM FINISH AND MATERIAL SCHEDULES
A-402	INTERIOR AND EXTERIOR ELEVATIONS
A-501	INTERIOR AND EXTERIOR WALL DETAILS
A-502	KENNEL STALLS, TRANSFER DOOR, SCHEDULE AND DETAILS
A-101B	KENNEL FLOOR PLAN NEW LAYOUT ALTERNATE 1
MECHANICAL	
M-001	LEGEND AND ABBREVIATIONS
MD100	DEMOLITION PLAN
M-100	KENNEL HEATING PLAN
M-110	KENNEL UNDERFLOOR PLUMBING PLAN
M-111	KENNEL ABOVE FLOOR PLUMBING PLAN
M-500	DETAILS
M-501	DIAGRAMS
M-600	SCHEDULES
MX100	EXISTING RADIANT TUBING EXHIBIT
ELECTRICAL	
E-100	KENNEL PLAN, EQUIPMENT CONNECTION SCHEDULE, NOTES
E-600	PANEL SCHEDULES

Michael Baker INTERNATIONAL AECC103
3900 C Street, Suite 900
Anchorage, Alaska 99503
907.273.1600 www.mbakerintl.com

COFFMAN ENGINEERS AECC249
800 F Street
Anchorage, Alaska 99501
907.276.6664 www.coffman.com

STATE OF ALASKA
WILLIAM KONTESS
A-11018
01-11-2019
REGISTERED PROFESSIONAL ENGINEER

CITY OF VALDEZ, ALASKA
OPPORTUNITIES IN EVERY SEASON

VALDEZ ANIMAL SHELTER
KENNEL RENOVATION
VALDEZ, ALASKA

NO.	DATE	REVISION	BY	APVD

CLIENT PROJECT:	16-350-1606
CAD DWG FILE:	G-001.DWG
DRAWN BY:	J. MONROY
CHECKED BY:	P. LANGLEY
PROJECT NUMBER:	167716

COPYRIGHT:
MICHAEL BAKER INTERNATIONAL

SHEET TITLE

GENERAL
LOCATION MAP,
VICINITY MAP,
KEY PLAN AND
DRAWING INDEX

G-001

IF SHEET IS LESS THAN 22"x34" IT IS A REDUCED PRINT - SCALE ACCORDINGLY

LIFE SAFETY CODE ANALYSIS

CODE COMPLIANCE INFORMATION

1. **PROJECT INFORMATION**
   - PROJECT: ANIMAL SHELTER RENOVATION
   - PROJECT LOCATION: VALDEZ, AK
   - TYPE OF PROJECT: RENOVATION
   - GENERAL USE: BUSINESS, GROUP B (IBC 304)
   - CONSTRUCTION TYPE: V-B, UNSPRINKLERED
   - AREA: 4,882 TOTAL SF; 1,365 SF RENOVATED AREA

2. **PROJECT DESCRIPTION**

   - REPLACE KENNEL AREA SLAB AND HYDRONIC LOOP SYSTEM WITH NEW, ALONG WITH UPGRADED IN-FLOOR DRAINAGE. PROJECT CONSTRUCTS NEW CMU KENNELS ON CONCRETE CURBS, COMPLETE WITH WATERPROOF SPRAY-ON COATINGS AND CHAIN LINK GATES.
   - ALTERNATE A SUBSTITUTES A PANELIZED KENNEL SYSTEM FOR CMU KENNELS

3. **APPLICABLE CODES AND STANDARDS**

   - AMERICANS WITH DISABILITIES ACT (ADA 2010)
   - ARCHITECTURAL BARRIERS ACT
   - INTERNATIONAL BUILDING CODE (IBC) 2012
   - INTERNATIONAL FIRE CODE (IFC) 2012
   - INTERNATIONAL MECHANICAL CODE (IMC) 2012
   - ELECTRIC CODE AS ADOPTED BY 8 AAC 70.25, AS AMENDED 6 MAR 16
   - PLUMBING CODE AS ADOPTED BY 8 AAC 63.010, AS AMENDED 6 MAR 16
   - NFPA 72 – NATIONAL FIRE ALARM AND SIGNALING CODE, 2016

4. **OCCUPANCY CLASSIFICATIONS (IBC CHAPTER 3)**

   - BUSINESS GROUP B (IBC SECTION 304), RENOVATED KENNEL AREA AND INCIDENTAL USES, SUCH AS MECHANICAL ROOM

   - UTILITY AND MISCELLANEOUS GROUP U (IBC SECTION 312) FOR ACCESSORY USE AREAS INCLUDING GARAGE

5. **BUILDING HEIGHTS AND AREAS (IBC CHAPTER 5)**

   - TABLE 503, ALLOWABLE BUILDING HEIGHTS AND AREAS:

     B TYPE V-B, 4,882 SF, 1 STORY – OK

     U TYPE V-B, 5,500 SF, 1 STORY – OK (BOTH INCIDENTAL AND ACCESSORY USE AREAS)

   - BUILDING AREA MODIFICATION CALCULATION NOT REQUIRED

   - AREA LIMITATION FOR ACCESSORY OCCUPANCIES MUST BE < 10% OF THE BUILDING AREA OF THE STORY THEY OCCUPY (IBC 508.2.1)

     GARAGE: 328 SF
     TOTAL< 10% OF BLDG AREA – OK

   - AREA LIMITATION FOR INCIDENTAL USES MUST BE <10% OF BUILDING AREA OF THE STORY IT OCCUPIES AND PROVIDE 1-HOUR SEPARATION IF UNSPRINKLERED PER TABLE 509, WHERE ANY PIECE OF EQUIPMENT IS RATED OVER 400,000 BTU PER HOUR

     MECH RM: 210 SF
     TOTAL < 10% OF BLDG AREA – OK

   - MIXED USE OCCUPANCY GROUP B WITH ACCESSORY OCCUPANCY U (SECTION 508.1)

   - REQUIRED SEPARATION OF OCCUPANCIES (TABLE 508.4):

     B SEPARATED FROM U – NO REQUIREMENT

6. **TYPES OF CONSTRUCTION (IBC CHAPTER 6)**

   CODE REFERENCE: IBC TABLE 601

TABLE 1: FIRE RESISTIVE RATING, BUILDING ELEMENTS, TYPE V-B

BUILDING ELEMENT	REQUIRED	PROVIDED IN BUILDING
PRIMARY STRUCTURAL FRAME	0 HOUR	0 HOUR
EXTERIOR NON-LOAD BEARING WALL BASED ON FIRE SEPARATION DISTANCE (IBC TABLE 602)	0 HOUR FOR ≥ 10 FT	0 HOUR
INTERIOR NON-BEARING WALL	0 HOUR	0 HOUR
FLOOR CONSTRUCTION	0 HOUR	0 HOUR
ROOF CONSTRUCTION	0 HOUR	0 HOUR

7. **FIRE AND SMOKE PROTECTION FEATURES (IBC CHAPTER 7)**

   - ALLOWABLE AREA OF OPENINGS IS UNLIMITED PER IBC 705.8.1 EXCEPTION 2 FOR BUILDINGS WHOS EXTERIOR BEARING WALLS, EXTERIOR NONBEARING WALLS AND EXTERIOR PRIMARY FRAME ARE NOT TO BE FIRE-RESISTANCE RATED.

   - JOINTS IN EXTERIOR WALLS THAT ARE PERMITTED TO HAVE UNPROTECTED OPENINGS ARE NOT REQUIRED TO BE FIRE-RESISTANCE RATED (IBC 705.9 EXCEPTION)

   - FIRE BARRIERS OF INCIDENTAL AREAS (IBC 707.3.7) SHALL HAVE A FIRE RESISTANCE RATING OF 1 HOUR PER TABLE 509.

   - THROUGH PENETRATIONS OF FIRE BARRIER WALLS SHALL BE FIRE-RESISTANCE RATED (IBC 714.3.1.1) AND PROTECTED BY AN APPROVED FIRE-STOP SYSTEM (IBC 714.3.1.2)

   - WHERE THROUGH PENETRATION ITEMS ARE STEEL, FERROUS OR COPPER PIPES, TUBES OR CONDUITS, THE ANNULAR SPACE IS PERMITTED TO BE PROTECTED BY GROUT OR MORTAR IN ACCORDANCE WITH IBC 714.3.1 EXCEPTION 1.

   - ANNULAR SPACES AT PENETRATIONS IN FIRE BARRIER WALLS SHALL PREVENT THE PASSAGE OF FLAME AND HOT GASES SUFFICIENT TO IGNITE COTTON WASTE WHEN SUBJECTED TO ASTM E 119 OR UL 263 (IBC 714.3.1, EXCEPTION 2)

TABLE 2: OPENING AND PENETRATION PROTECTION

TYPE OF SEPARATION ASSEMBLY	REQUIRED PROTECTION
DOOR OPENINGS	
1-HOUR RATED FIRE BARRIERS (TABLE 716.5)	1 HR RATED; FIRE RATED GLAZING ≤ 100 SQ IN, 60 MIN RATING.
WINDOW ASSEMBLY	
1-HOUR RATED FIRE BARRIER (TABLE 716.6)	NOT PERMITTED
INCIDENTAL USE AREAS	¾ HOUR
DUCTS AND AIR TRANSFER OPENINGS	
1-HOUR RATED FIRE BARRIERS	PROTECTED WITH APPROVED FIRE DAMPERS (PARA 717.5.2)

8. **INTERIOR FINISHES (IBC CHAPTER 8)**

TABLE 3: INTERIOR WALL AND CEILING FINISH REQUIREMENTS BY OCCUPANCY—NONSPRINKLERED (TABLE 803.9)

GROUP	INTERIOR EXIT PASSAGEWAYS	CORRIDORS AND ENCLOSURES FOR EXIT ACCESS	ROOMS AND ENCLOSED SPACES
B	CLASS A	CLASS B	CLASS C
S	CLASS C	CLASS C	CLASS C
U	CLASS B	CLASS B	CLASS C

   - INTERIOR FLOOR FINISHES FOR GROUPS B AND S SHALL BE NOT LESS THAN CLASS II (IBC 804.4.2)

   - SUSPENDED ACOUSTIAL CEILING SYSTEM SHALL BE INSTALLED IN ACCORDANCE WITH ASTM C 635 AND ASTM 636.

9. **FIRE PROTECTION SYSTEMS (IBC CHAPTER 9)**

   - RENOVATED AREA IS BOUNDED BY FIRE BARRIER RATED PARTITIONS AND HAS A CALCULATED OCCUPANT LOAD LESS THAN 30 AND DOES NOT MEET THE THRESHOLD OF REQUIRING AN AUTOMATIC SPRINKLER SYSTEM. (FIGURE 903.2)

   - PROVIDE PORTABLE FIRE EXTINGUISHER COMPLYING WITH IFC AND NFPA 10 (IBC 906.1 AND 2) AND FOR CLASS A FIRE HAZARDS (IBC 906.3, 906.3.1):

     PER TABLE 906.3(1), ORDINARY HAZARD OCCUPANCY, PROVIDE 1 FIRE EXTINGUISHER TO COVER A MAXIMUM OF 1,500 SF WITH MAXIMUM TRAVEL DISTANCE OF 75 FT TO FIRE EXTINGUISHER

10. **MEANS OF EGRESS (IBC CHAPTER 10)**

   - OCCUPANT LOAD EXISTING BUILDING (SECTION 1004)

     4,882 SF; B OCCUPANCY: 49 OCCUPANTS

   - OCCUPANT LOAD RENOVATED PORTION OF THE BUILDING (SECTION 1004)

     1,365 SF; B OCCUPANCY: 14 OCCUPANTS

   - EGRESS WIDTH (SECTION 1005.3.2)

     ALL EGRESS DOORS PROVIDE MINIMUM 32" CLEAR WIDTH /0.22 = 160 OCCUPANTS, EXCEEDS OCCUPANTS EXITING EACH EXIT – OK

   - MEANS OF EGRESS ILUMINATION (SECTION 1006)

     PROVIDE ILLUMINATION FOR THE MEANS OF EGRESS, INCLUDING EXIT DISCHARGE DURING THE ENTIRE TIME THE BUILDING IS OCCUPIED

     PROVIDE EMERGENCY POWER FOR ILLUMINATION FOR CORRIDORS, EXIT PASSAGEWAYS, EXTERIOR EGRESS COMPONENTS, INTERIOR EXIT DISCHARGE ELEMENTS, AND EXTERIOR LANDINGS

   - ACCESSIBLE MEANS OF EGRESS (SECTION 1007

     NOT REQUIRED IN ALTERATIONS TO EXISTING BUILDING

   - DOORS (SECTION 1008)

     MINIMUM CLEAR WIDTH OF MEANS OF EGRESS DOORS IS 32" (SECTION 1008.1.1). – OK

     THRESHOLDS SHALL NOT EXCEED 3/4 INCH IN HEIGHT ABOVE THE FINISHED FLOOR OR LANDING (SECTION 1008.7.1)

     DOOR HANDLES, PULLS, LATCHES, LOCKS AND OTHE DEVICES ON DOORS ARE REQUIRED TO BE ACCESSIBLE (IBC 1008.1.9.1)

   - EXIT SIGNS (SECTION 1011): EXITS AND EXIT ACCESS DOORS SHALL BE MARKED BY AN APPROVED EXIT SIGN READILY VISIBLE FROM ANY DIRECTION OF EGRESS TRAVEL. THE PATH OF EGRESS TRAVEL TO EXITS AND WITHIN EXITS SHALL BE MARKED BY READILY VISIBLE EXIT SIGNS.

   - EXIT ACCESS (IBC SECTION 1014)

     EGRESS THROUGH INTERVENING SPACES IS ALLOWABLE PROVIDED ADJACENT AREAS ARE ACCESSORY TO ONE ANOTHER AND PROVIDE A DISCERNABLE PATH TO AN EXIT (SECTION 1014.2).

     COMMON PATH OF TRAVEL SHALL NOT EXCEED 75 FT. FOR UNSPRINKLERED, B OCCUPANCY SPACES WITH AN OCCUPANCY LOAD GREATER THAN 30 (TABLE 1014.3). ACTUAL COMMON PATH OF TRAVEL = 71 FT. OK.

   - EXIT AND EXIT ACCESS DOORWAYS (IBC SECTION 1015)

     TWO EXITS OR EXIT ACCESS DOORWAYS FROM ANY SPACE SHALL BE PROVIDED WHERE THE OCCUPANT LOAD FOR GROUP B OCCUPANCY EXCEEDS 40 OCCUPANTS (SECTION 1015.1 AND TABLE 1015.1)

     TWO EXIT ACCESS DOORWAYS ARE REQUIRED IN BOILER, INCINERATOR AND FURNACE ROOMS WHERE THE AREA IS OVER 500 SF AND ANY FUEL FIRED EQUIPMENT EXCEEDS 400,000 BTU INPUT CAPACITY (SECTION 1015.3)

   - EXIT ACCESS TRAVEL DISTANCE (IBC SECTION 1016): EXIT ACCESS TRAVEL DISTANCE FOR GROUP B, UNSPRINKLERED OCCUPANCY SHALL NOT EXCEEED 200 FT. (TABLE 1016.2)

   - CORRIDORS (IBC SECTION 1018)

     FIRE RESISTANCE RATING IS NOT REQUIRED FOR CORRIDORS IN A GROUP B OCCUPANCY WHERE THE SPACE QUALIFIES FOR A SINGLE EXIT (SECTION 1018.1, EXCEPTION 4)

     MINIMUM CORRIDOR WIDTH FOR OCCUPANCY CAPACITY LESS THAN 50: 36 INCHES (TABLE 1018.2)

     NO DEAD-END CORRIDORS EXCEEDING 20 FT. (IBC 1018.4)

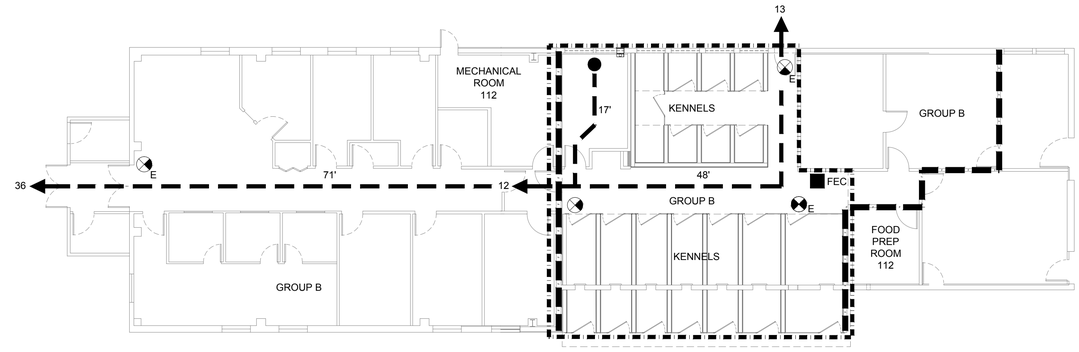

1 G-002 **LIFE SAFETY PLAN**

3/32" = 1'-0"

0 5' 10' 20'

PLAN NORTH

SYMBOL LEGEND

NUMBER OF OCCUPANTS AT EXIT AND DIRECTION OF EXIT	36
DISTANCE EXIT PATH IN FEET	25'
FIRE EXTINGUISHER	FE
FIRE EXTINGUISHER CABINET (EXISTING)	FEC
OCCUPANT	
1-HR FIRE RESISTANCE RATING	
RENOVATED AREA	
EXIT LIGHT	
EXISTING EXIT LIGHT	E
EXIT	

OCCUPANCY GROSS AREA

B OCCUPANCY	4,882 SQUARE FEET

OCCUPANCY LOADS

B OCCUPANCY	=	49 OCCUPANTS
TOTAL	=	49 OCCUPANTS

   - EXIT DISCHARGE (IBC SECTION 1027): EXITS SHALL DISCHARGE DIRECTLY TO THE EXTERIOR OF THE BUILDING AND BE AT GRADE OR PROVIDE DIRECT ACCESS TO GRADE (SECTION 1027.1). EXIT DISCHARGE CAPACITY SHALL NOT BE LESS THAN THE REQUIRED DISCHARGE CAPACITY OF THE EXITS BEING SERVED (SECTION 1027.2)

11. **ACCESSIBILITY (IBC CHAPTER 11):**

   - EXISTING BUILDINGS SHALL COMPLY WITH SECTION 3411 (SECTION 1103.2.2)

Michael Baker INTERNATIONAL AECC103
3900 C Street, Suite 900
Anchorage, Alaska 99503
907.273.1600 www.mbakerintl.com

COFFMAN ENGINEERS AECC249
800 E Street
Anchorage, Alaska 99501
907.276.6664 www.coffman.com

STATE OF ALASKA 49TH WILLIAM KONTESS A-11018 9-11-26 REGISTERED PROFESSIONAL ENGINEER

CITY OF VALDEZ, ALASKA · OPPORTUNITIES IN EVERY SEASON

VALDEZ ANIMAL SHELTER
KENNEL RENOVATION
VALDEZ, ALASKA

NO.	DATE	REVISION	BY	APV'D

CLIENT PROJECT:	16-350-1606
CAD DWG FILE:	G-002.DWG
DRAWN BY:	J. MONROY
CHECKED BY:	B. KONTESS
PROJECT NUMBER:	167167

COPYRIGHT:
MICHAEL BAKER INTERNATIONAL

SHEET TITLE

GENERAL
CODE ANALYSIS
AND
LIFE SAFETY PLAN

G-002

SHEET 2 OF 25

IF SHEET IS LESS THAN 22"x34" IT IS A REDUCED PRINT - SCALE ACCORDINGLY

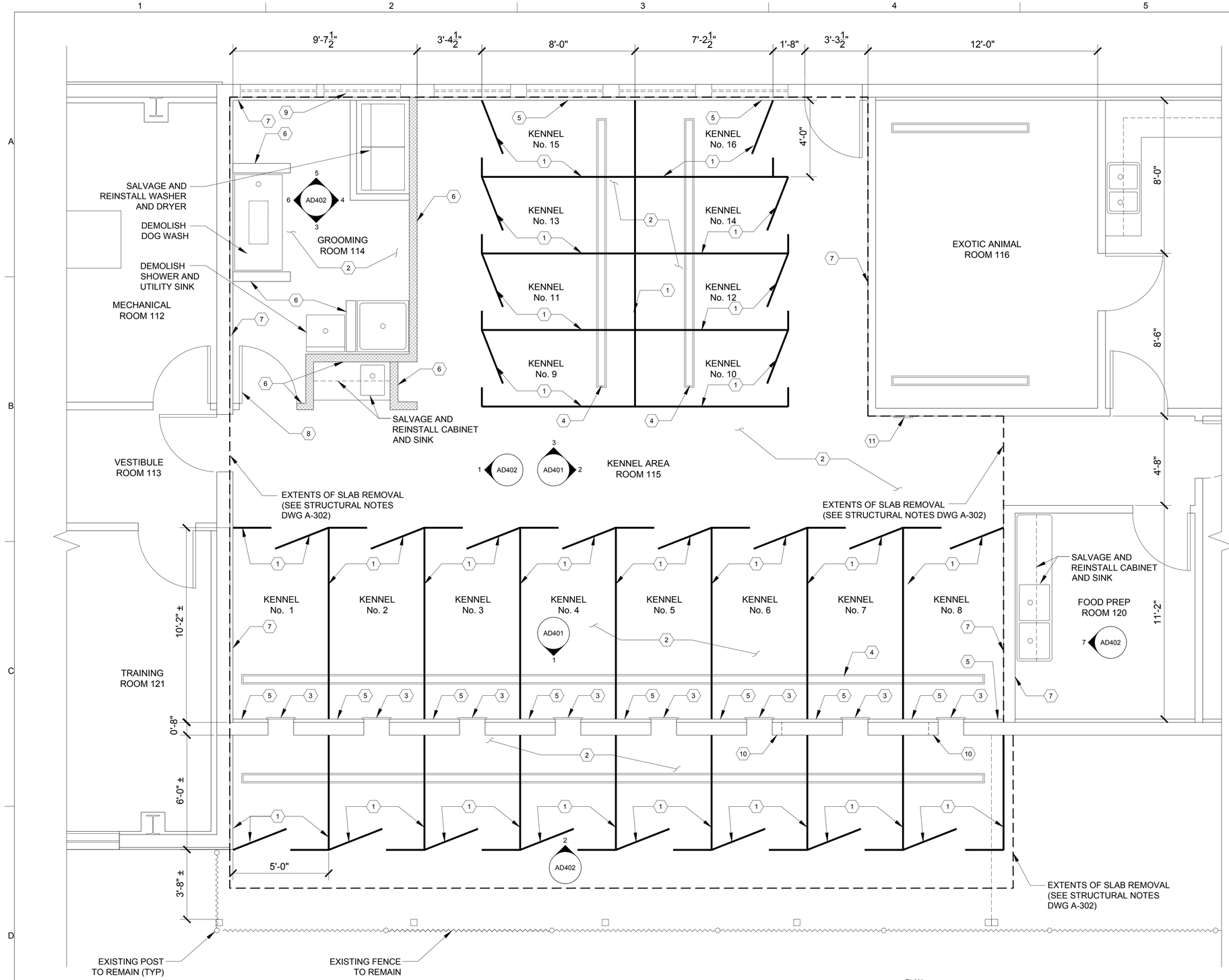

1 KENNEL DEMO FLOOR PLAN
3/8" = 1'-0"

GENERAL NOTES

1. ALL DIMENSIONS ARE IN FEET/INCHES, UON.
2. THESE GENERAL NOTES ARE NOT INTENDED TO REPLACE SPECIFICATIONS - REFER TO SPECIFICATION REQUIREMENTS IN ADDITION TO GENERAL NOTES.
3. ROOM AREAS AND PERIMETERS ARE APPROXIMATE AND FOR REFERENCE ONLY - VERIFY QUANTITIES AND DIMENSIONS IN FIELD.
4. DO NOT SCALE DIMENSIONS FROM DRAWINGS - REQUEST NECESSARY DIMENSIONS NOT SHOWN ON THE DRAWINGS FROM THE ARCHITECT.
5. ALL DIMENSIONS ARE TO FOS AND CENTER OF DOORS AND OPENINGS, UON. ALL NON-DIMENSIONED DOOR LOCATIONS SHALL BE OFFSET 4" FROM THE ADJACENT WALL TO THE HINGE SIDE OF THE DOOR OPENING.
6. CONTRACTOR SHALL BE RESPONSIBLE FOR SCHEDULING AND COORDINATING THE WORK OF SUB-CONTRACTORS - THE CONTRACTOR SHALL BE RESPONSIBLE TO COORDINATE WITH THE BUILDING OWNER, TENANT, OR THE DESIGNATED REPRESENTATIVE FOR THE DELIVER AND INSTALLATION OF ITEMS BEING PROVIDED AND INSTALLED BY OTHERS.
7. MECHANICAL, PLUMBING AND ELECTRICAL WORK RELATED TO THE DEMOLITION AND NEW INSTALLATION OF COMPONENTS SHALL COMPLY WITH ALL APPLICABLE CODES.
8. ALL MATERIALS, FABRICATION, AND INSTALLATION SHALL COMPLY WITH THE APPLICABLE REQUIREMENTS AND SPECIFICATIONS FOR EACH DIVISION OF WORK.
9. CONTRACTOR SHALL BE RESPONSIBLE FOR TIMELY ORDERING OF MATERIALS INCLUDED IN THESE CONTRACT DOCUMENTS.
10. CONTRACTOR SHALL CLEAN, PATCH AND REPAIR ALL SURFACES DAMAGED BY DEMOLITION, ALTERATION OR INSTALLATION OF THE WORK.
11. CONTRACTOR SHALL PREPARE ALL WALLS AND PARTITIONS AS REQUIRED BY MANUFACTURERS TO RECEIVE THE SPECIFIED FINISHES.
12. ALL REQUESTS FOR INFORMATION PROMPTED BY THE AUTHORITY HAVING JURISDICTION (AHJ) SHALL INCLUDE A COPY OF AHJ'S COMMENTS AND THE BUILDING INSPECTOR'S FIELD REPORT TO ENSURE AN ACCURATE AND TIMELY RESPONSE.

KEY NOTES

1. DEMOLISH KENNEL PARTITION AND GATE.
2. DEMOLISH CONCRETE FLOOR SLAB. DEMOLISH ABANDONED SLAB AS NEEDED TO INSTALL NEW TRENCH DRAINS AND PIPING.
3. DEMOLISH DOG TRANSFER DOOR, TRACKS AND CABLE.
4. DEMOLISH TRENCH DRAIN AND GRATE.
5. DEMOLISH FURRING, RIGID INSULATION, GYPSUM BOARD/PLYWOOD AND FRP TO 77" ABOVE FLOOR ELEVATION.
6. DEMOLISH LIGHT GAUGE METAL PARTITION AND GYPSUM BOARD.
7. DEMOLISH GYPSUM BOARD/PLYWOOD AND FRP TO 72" ABOVE FLOOR ELEVATION.
8. SALVAGE AND RE-INSTALL FRAME AND DOOR.
9. DEMOLISH EXISTING WINDOW AND PREPARE FOR NEW EXHAUST FAN INSTALLATION.
10. ENLARGE EXISTING CMU OPENINGS TO 22" WIDE X 30" TALL.
11. EXISTING FIRE EXTINGUISHER CABINET TO REMAIN.

STRUCTURAL NOTES

1. SEE DRAWING A-302 FOR STRUCTURAL NOTES.

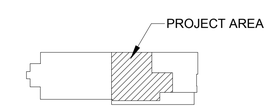

KEY PLAN
NOT TO SCALE

Michael Baker INTERNATIONAL AECC103
3900 C Street, Suite 900
Anchorage, Alaska 99503
907.273.1600 www.mbakerintl.com

COFFMAN ENGINEERS AECC249
800 E Street
Anchorage, Alaska 99501
907.276.6664 www.coffman.com

STATE OF ALASKA
WILLIAM KONTESS
A-11018
9-11-26
REGISTERED PROFESSIONAL ENGINEER

CITY OF VALDEZ, ALASKA
OPPORTUNITIES IN EVERY SEASON

VALDEZ ANIMAL SHELTER
KENNEL RENOVATION
VALDEZ, ALASKA

NO.	DATE	REVISION	BY	APVD

CLIENT PROJECT:	16-350-1606
CAD DWG FILE:	AD101.DWG
DRAWN BY:	J. MONROY
CHECKED BY:	P. LANGLEY
PROJECT NUMBER:	167167

COPYRIGHT:
MICHAEL BAKER INTERNATIONAL

SHEET TITLE
ARCHITECTURAL
KENNEL FLOOR PLAN
DEMO

AD101

IF SHEET IS LESS THAN 22"x34" IT IS A REDUCED PRINT - SCALE ACCORDINGLY

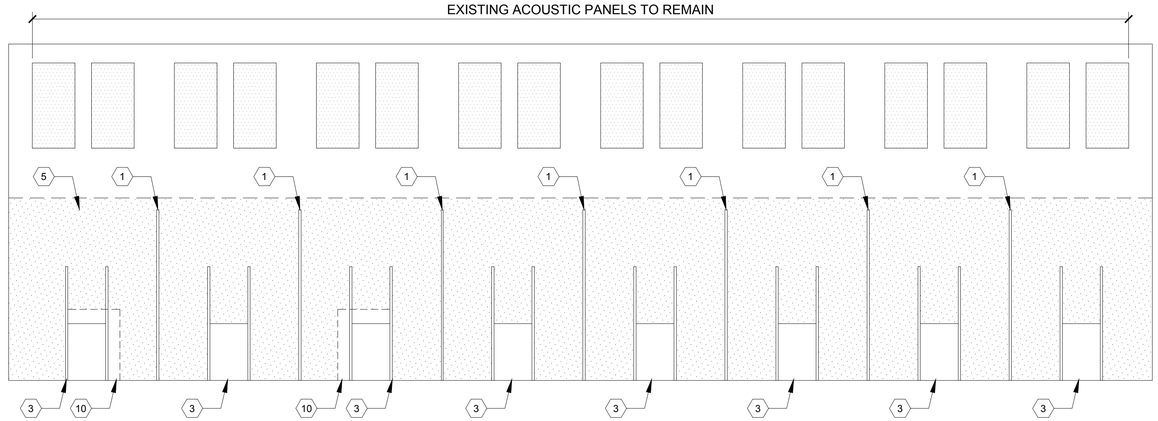

1 KENNEL AREA SOUTH INTERIOR ELEVATION
3/8" = 1'-0"

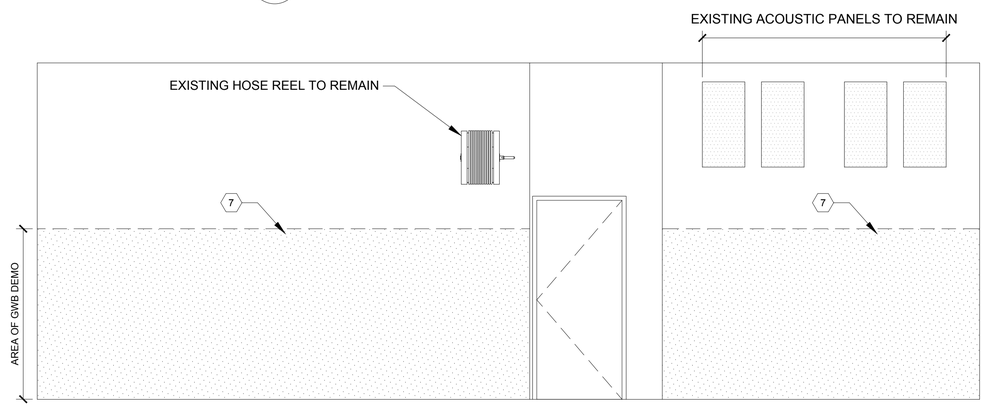

2 KENNEL AREA EAST INTERIOR ELEVATION
3/8" = 1'-0"

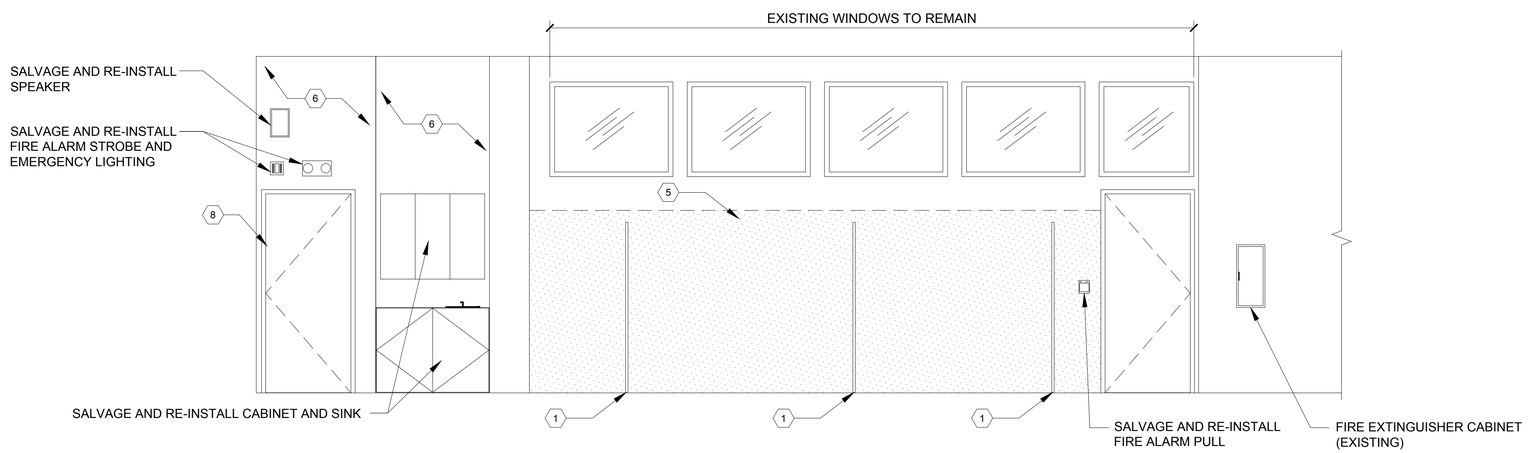

3 KENNEL AREA NORTH INTERIOR ELEVATION
3/8" = 1'-0"

GENERAL NOTES

1. ALL DIMENSIONS ARE IN FEET/INCHES, UON.
2. THESE GENERAL NOTES ARE NOT INTENDED TO REPLACE SPECIFICATIONS - REFER TO SPECIFICATION REQUIREMENTS IN ADDITION TO GENERAL NOTES.
3. ROOM AREAS AND PERIMETERS ARE APPROXIMATE AND FOR REFERENCE ONLY - VERIFY QUANTITIES AND DIMENSIONS IN FIELD.
4. DO NOT SCALE DIMENSIONS FROM DRAWINGS - REQUEST NECESSARY DIMENSIONS NOT SHOWN ON THE DRAWINGS FROM THE ARCHITECT.
5. ALL DIMENSIONS ARE TO FOS AND CENTER OF DOORS AND OPENINGS, UON. ALL NON-DIMENSIONED DOOR LOCATIONS SHALL BE OFFSET 4" FROM THE ADJACENT WALL TO THE HINGE SIDE OF THE DOOR OPENING.
6. CONTRACTOR SHALL BE RESPONSIBLE FOR SCHEDULING AND COORDINATING THE WORK OF SUB-CONTRACTORS - THE CONTRACTOR SHALL BE RESPONSIBLE TO COORDINATE WITH THE BUILDING OWNER, TENANT, OR THE DESIGNATED REPRESENTATIVE FOR THE DELIVER AND INSTALLATION OF ITEMS BEING PROVIDED AND INSTALLED BY OTHERS.
7. MECHANICAL, PLUMBING AND ELECTRICAL WORK RELATED TO THE DEMOLITION AND NEW INSTALLATION OF COMPONENTS SHALL COMPLY WITH ALL APPLICABLE CODES.
8. ALL MATERIALS, FABRICATION, AND INSTALLATION SHALL COMPLY WITH THE APPLICABLE REQUIREMENTS AND SPECIFICATIONS FOR EACH DIVISION OF WORK.
9. CONTRACTOR SHALL BE RESPONSIBLE FOR TIMELY ORDERING OF MATERIALS INCLUDED IN THESE CONTRACT DOCUMENTS.
10. CONTRACTOR SHALL CLEAN, PATCH AND REPAIR ALL SURFACES DAMAGED BY DEMOLITION, ALTERATION OR INSTALLATION OF THE WORK.
11. CONTRACTOR SHALL PREPARE ALL WALLS AND PARTITIONS AS REQUIRED BY MANUFACTURERS TO RECEIVE THE SPECIFIED FINISHES.
12. ALL REQUESTS FOR INFORMATION PROMPTED BY THE AUTHORITY HAVING JURISDICTION (AHJ) SHALL INCLUDE A COPY OF AHJ'S COMMENTS AND THE BUILDING INSPECTOR'S FIELD REPORT TO ENSURE AN ACCURATE AND TIMELY RESPONSE.

KEY NOTES

1. DEMOLISH KENNEL PARTITION AND GATE.
2. DEMOLISH CONCRETE FLOOR SLAB. DEMOLISH ABANDONED SLAB AS NEEDED TO INSTALL NEW TRENCH DRAINS AND PIPING.
3. DEMOLISH DOG TRANSFER DOOR, TRACKS AND CABLE.
4. DEMOLISH TRENCH DRAIN AND GRATE.
5. DEMOLISH FURRING, RIGID INSULATION, GYPSUM BOARD/PLYWOOD AND FRP TO 77" ABOVE FLOOR ELEVATION.
6. DEMOLISH LIGHT GAUGE METAL PARTITION AND GYPSUM BOARD.
7. DEMOLISH GYPSUM BOARD/PLYWOOD AND FRP TO 72" ABOVE FLOOR ELEVATION.
8. SALVAGE AND RE-INSTALL FRAME AND DOOR.
9. DEMOLISH EXISTING WINDOW AND PREPARE FOR NEW EXHAUST FAN INSTALLATION
10. ENLARGE EXISTING CMU OPENINGS TO 22" WIDE X 30" TALL

STRUCTURAL NOTES

1. SEE DRAWING A-302 FOR STRUCTURAL NOTES.

Michael Baker INTERNATIONAL AECC103
3900 C Street, Suite 900
Anchorage, Alaska 99503
907.273.1600 www.mbakerintl.com

COFFMAN ENGINEERS AECC249
800 E Street
Anchorage, Alaska 99501
907.276.6664 www.coffman.com

STATE OF ALASKA
WILLIAM KONTESS
A-11018
9-11-2018
REGISTERED PROFESSIONAL ENGINEER

CITY OF VALDEZ, ALASKA
OPPORTUNITIES IN EVERY SEASON

VALDEZ ANIMAL SHELTER
KENNEL RENOVATION
VALDEZ, ALASKA

NO.	DATE	REVISION	BY	APVD

CLIENT PROJECT:	16-350-1606
CAD DWG FILE:	AD401.DWG
DRAWN BY:	J. MONROY
CHECKED BY:	P. LANGLEY
PROJECT NUMBER:	167167

COPYRIGHT:
MICHAEL BAKER INTERNATIONAL

SHEET TITLE
ARCHITECTURAL
EXISTING KENNEL AREA
ELEVATIONS
DEMO

AD401

IF SHEET IS LESS THAN 22"x34" IT IS A REDUCED PRINT - SCALE ACCORDINGLY

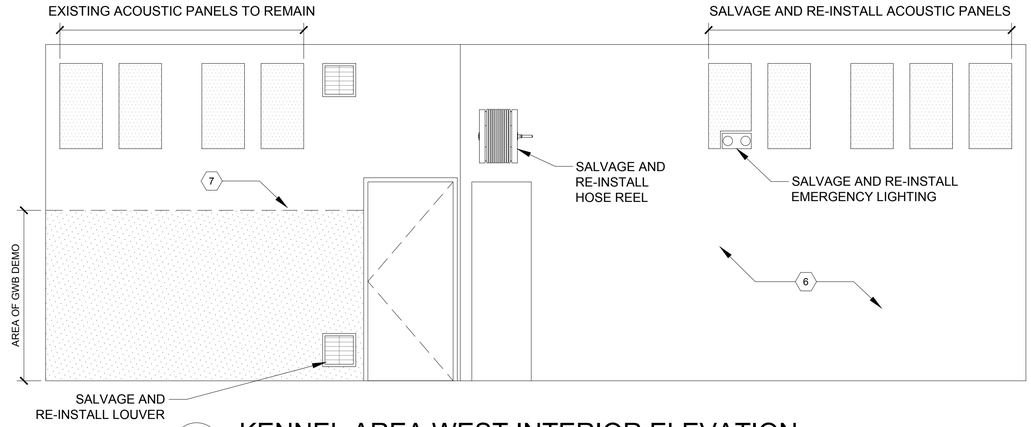

1 KENNEL AREA WEST INTERIOR ELEVATION
3/8" = 1'-0"

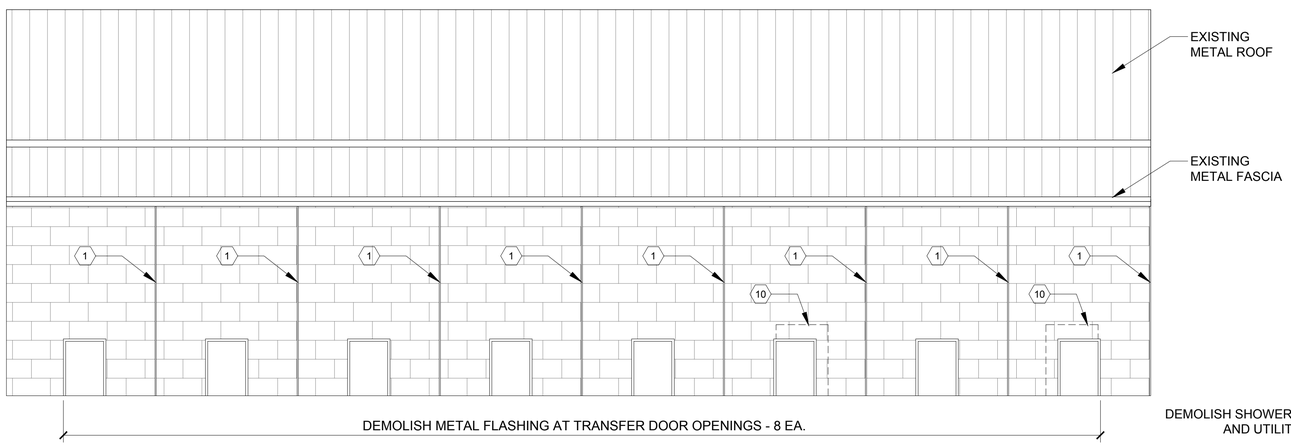

2 EXTERIOR KENNEL AREA - NORTH ELEVATION
3/8" = 1'-0"

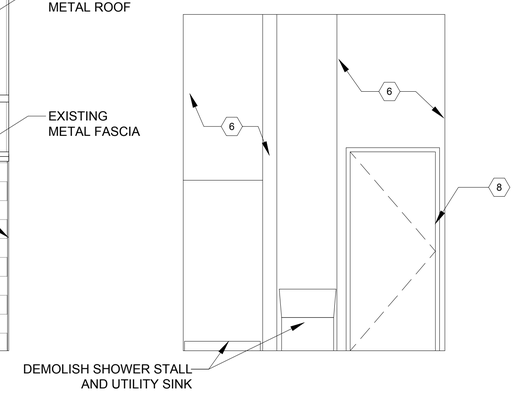

3 GROOMING ROOM SOUTH INTERIOR ELEVATION
3/8" = 1'-0"

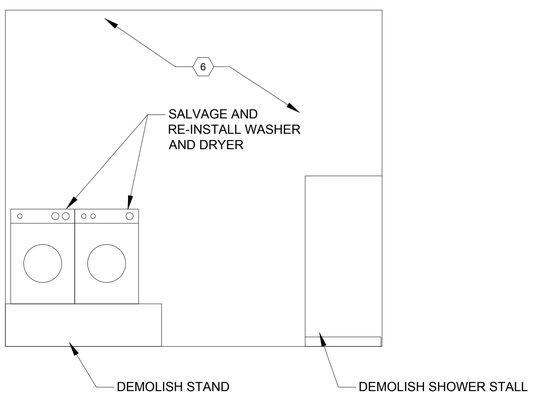

4 GROOMING ROOM EAST INTERIOR ELEVATION
3/8" = 1'-0"

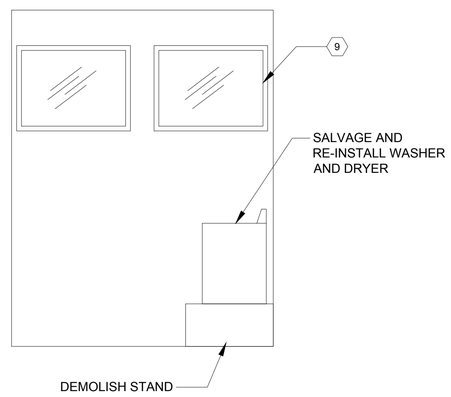

5 GROOMING ROOM NORTH INTERIOR ELEVATION
3/8" = 1'-0"

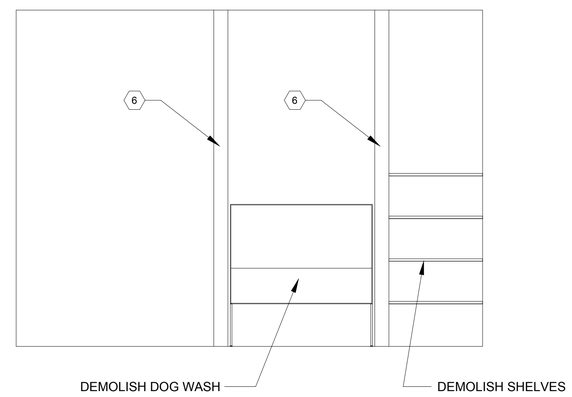

6 GROOMING ROOM WEST INTERIOR ELEVATION
3/8" = 1'-0"

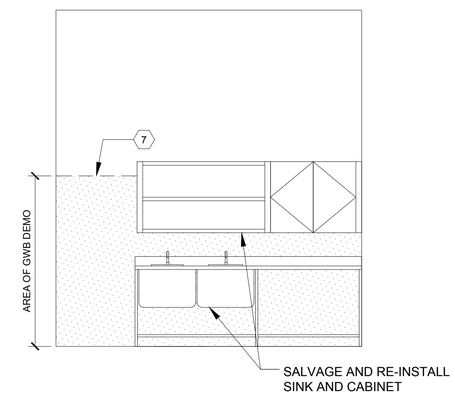

7 FOOD PREP ROOM WEST INTERIOR ELEVATION
3/8" = 1'-0"

GENERAL NOTES

1. ALL DIMENSIONS ARE IN FEET/INCHES, UON.
2. THESE GENERAL NOTES ARE NOT INTENDED TO REPLACE SPECIFICATIONS - REFER TO SPECIFICATION REQUIREMENTS IN ADDITION TO GENERAL NOTES.
3. ROOM AREAS AND PERIMETERS ARE APPROXIMATE AND FOR REFERENCE ONLY - VERIFY QUANTITIES AND DIMENSIONS IN FIELD.
4. DO NOT SCALE DIMENSIONS FROM DRAWINGS - REQUEST NECESSARY DIMENSIONS NOT SHOWN ON THE DRAWINGS FROM THE ARCHITECT.
5. ALL DIMENSIONS ARE TO FOS AND CENTER OF DOORS AND OPENINGS, UON. ALL NON-DIMENSIONED DOOR LOCATIONS SHALL BE OFFSET 4" FROM THE ADJACENT WALL TO THE HINGE SIDE OF THE DOOR OPENING.
6. CONTRACTOR SHALL BE RESPONSIBLE FOR SCHEDULING AND COORDINATING THE WORK OF SUB-CONTRACTORS - THE CONTRACTOR SHALL BE RESPONSIBLE TO COORDINATE WITH THE BUILDING OWNER, TENANT, OR THE DESIGNATED REPRESENTATIVE FOR THE DELIVER AND INSTALLATION OF ITEMS BEING PROVIDED AND INSTALLED BY OTHERS.
7. MECHANICAL, PLUMBING AND ELECTRICAL WORK RELATED TO THE DEMOLITION AND NEW INSTALLATION OF COMPONENTS SHALL COMPLY WITH ALL APPLICABLE CODES.
8. ALL MATERIALS, FABRICATION, AND INSTALLATION SHALL COMPLY WITH THE APPLICABLE REQUIREMENTS AND SPECIFICATIONS FOR EACH DIVISION OF WORK.
9. CONTRACTOR SHALL BE RESPONSIBLE FOR TIMELY ORDERING OF MATERIALS INCLUDED IN THESE CONTRACT DOCUMENTS.
10. CONTRACTOR SHALL CLEAN, PATCH AND REPAIR ALL SURFACES DAMAGED BY DEMOLITION, ALTERATION OR INSTALLATION OF THE WORK.
11. CONTRACTOR SHALL PREPARE ALL WALLS AND PARTITIONS AS REQUIRED BY MANUFACTURERS TO RECEIVE THE SPECIFIED FINISHES.
12. ALL REQUESTS FOR INFORMATION PROMPTED BY THE AUTHORITY HAVING JURISDICTION (AHJ) SHALL INCLUDE A COPY OF AHJ'S COMMENTS AND THE BUILDING INSPECTOR'S FIELD REPORT TO ENSURE AN ACCURATE AND TIMELY RESPONSE.

KEY NOTES

1. DEMOLISH KENNEL PARTITION AND GATE.
2. DEMOLISH CONCRETE FLOOR SLAB. DEMOLISH ABANDONED SLAB AS NEEDED TO INSTALL NEW TRENCH DRAINS AND PIPING.
3. DEMOLISH DOG TRANSFER DOOR, TRACKS AND CABLE.
4. DEMOLISH TRENCH DRAIN AND GRATE.
5. DEMOLISH FURRING, RIGID INSULATION, GYPSUM BOARD/PLYWOOD AND FRP TO 77" ABOVE FLOOR ELEVATION.
6. DEMOLISH LIGHT GAUGE METAL PARTITION AND GYPSUM BOARD.
7. DEMOLISH GYPSUM BOARD/PLYWOOD AND FRP TO 72" ABOVE FLOOR ELEVATION.
8. SALVAGE AND RE-INSTALL FRAME AND DOOR.
9. DEMOLISH EXISTING WINDOW AND PREPARE FOR NEW EXHAUST FAN INSTALLATION
10. ENLARGE EXISTING CMU OPENINGS TO 22" WIDE X 30" TALL

STRUCTURAL NOTES

1. SEE DRAWING A-302 FOR STRUCTURAL NOTES.

Michael Baker INTERNATIONAL AECC103
3900 C Street, Suite 900
Anchorage, Alaska 99503
907.273.1600 www.mbakerintl.com

COFFMAN ENGINEERS AECC249
800 E Street
Anchorage, Alaska 99501
907.276.6664 www.coffman.com

STATE OF ALASKA
WILLIAM KONTESS
A-11018
9-11-26
REGISTERED PROFESSIONAL ENGINEER

CITY OF VALDEZ, ALASKA
OPPORTUNITIES IN EVERY SEASON

VALDEZ ANIMAL SHELTER
KENNEL RENOVATION
VALDEZ, ALASKA

NO.	DATE	REVISION	BY	APVD

CLIENT PROJECT:	16-350-1606
CAD DWG FILE:	AD402.DWG
DRAWN BY:	J. MONROY
CHECKED BY:	P. LANGLEY
PROJECT NUMBER:	167167

COPYRIGHT:
MICHAEL BAKER INTERNATIONAL

SHEET TITLE
ARCHITECTURAL
KENNEL AREA
ELEVATIONS
DEMO

AD402

IF SHEET IS LESS THAN 22"x34" IT IS A REDUCED PRINT - SCALE ACCORDINGLY

GENERAL NOTES

1. IT IS THE CONTRACTOR'S RESPONSIBILITY TO INSPECT JOB SITE AND BE FAMILIAR WITH ALL THE EXISTING CONDITIONS THAT COULD AFFECT THE INSTALLATION OF ANY WORK SET FORTH IN THESE PLANS. THE CONTRACTOR IS RESPONSIBLE FOR VERYFING ALL DIMENSIONS, IF DIMENSIONS ARE NOT AS SHOWN, CONTACT MICHAEL BAKER INTERNATIONAL IMMEDIATELY.
2. THE JOB SITE AT THE COMPLETION OF CONSTRUCTION SHALL BE CLEANED OF ANY DEBRIS OR SPOIL RESULTING FROM THE CONSTRUCTION. AT NO TIME SHALL THIS MATERIAL OBSTRUCT THE NORMAL OPERATIONS OF THE OWNER.
3. ALL EQUIPMENT OR MATERIALS NOT SHOWN OR SPECIFIED ON THE PLANS OR IN THE SPECIFICATIONS, BUT REQUIRED TO COMPLETE THIS INSTALLATION SHALL BE SUPPLIED BY THE CONTRACTOR AS PART OF THE CONTRACTOR WORK.
4. ALL MATERIALS REQUIRED SHALL BE OF A GRADE AND QUALITY CONSISTENT WITH THE INTENDED USE AS SPECIFIED AND APPROVED BY THE ARCHITECT.
5. REFER TO THE CODE ANALYSIS PLANS AND WALL TYPES FOR THE FIRE AND SMOKE RATED ASSEMBLIES AND COMPLETE DESCRIPTIONS FOR WALL CONSTRUCTION.
6. INSTALL A CONTINUOUS BEAD OF SEALANT AT ALL GAPS/SEAMS BETWEEN FIXED EQUIPMENT AND WALLS OR OTHER ASSEMBLIES.
7. ALL COLOR SELECTIONS SHALL BE PER COLOR SCHEDULE ISSUED BY ARCHITECT, AFTER THE CONTRACTOR SUBMITS SAMPLES.
8. PARTITIONS ARE DIMENSIONED TO FACE OF STUD UNLESS OTHERWISE NOTED. ALL ROUGH OPENINGS ARE LOCATED 4" TO NEAREST ADJACENT WALL UNLESS OTHERWISE NOTED.
9. REFERENCE ALL DISCIPLINES FOR COORDINATION OF WORK.
10. ALL SURFACES AND ITEMS EXPOSED TO VIEW SHALL BE PAINTED OR FINISHED PER SPECIFICATION. REFER TO FLOOR PLANS, ROOM FINISH KEY, BUILDING SECTIONS, DETAILS AND SPECIFICATIONS FOR ADDITIONAL PAINTING AND FINISH REQUIREMENTS.
11. STUD SIZES TYPICALLY USED THROUGHOUT THE PROJECT ARE SHOWN WITH EACH ASSEMBLY TYPE.

VERTICAL AND HORIZONTAL ASSEMBLIES (PLAN VIEW)

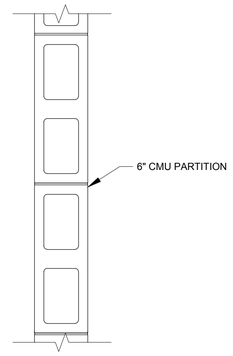

A WALL TYPE - PARTITION
1 1/2" = 1'-0"

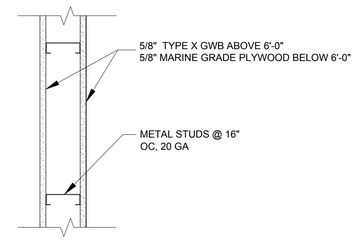

B WALL TYPE - PARTITION
1 1/2" = 1'-0"

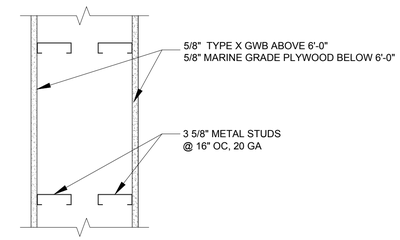

C WALL TYPE - PARTITION
1 1/2" = 1'-0"

GRAPHIC SYMBOLS

GRID LINES

DETAIL SYMBOL
DETAIL NUMBER
SHEET WHERE DETAIL IS DRAWN

BUILDING/WALL SECTION SYMBOL
SECTION NUMBER
SHEET WHERE SECTION IS DRAWN

ELEVATION SYMBOL
ELEVATION IDENTIFICATION
SHEET WHERE ELEVATION IS DRAWN

100'-0"A.F.F
96'-0"
ELEVATION CONTROL POINT OR DATUM POINT

NAME 12
ROOM NUMBER

WALL TYPE

KEYNOTE

REVISION

105A
DOOR NUMBER

WINDOW NUMBER

DEMO PHOTOGRAPH

PLAN NORTH
NORTH ARROW

5' DIAMETER REFERENCE CIRCLE FOR CLEARANCE

DIMENSION CONVENTIONS

TYPICAL:

1 1/2"
DIMENSIONS ARE FROM FACE OF STUD (FOS) TO FACE OF STUD (FOS) UON

1 1/2" CLR
INDICATES "CLEAR" DIMENSION FROM FACE OF FINISH (FOF) TO FACE OF FINISH (FOF)

MATERIALS/LEGEND

CONCRETE MANSONRY UNIT
FACE BRICK
CONCRETE (POURED IN PLACE)
GYPSUM BOARD
INSULATION (BATT & BLANKET)
INSULATION (RIGID/SEMI-RIGID)
PLYWOOD
CONTINUOUS ROUGH WOOD
BLOCKING, ROUGH WOOD
METAL (LARGE SCALE)
GRAVEL
EARTH
QUARRY/CERAMIC TILE

ASSEMBLY TYPE SYMBOL:

A6S
WALL TYPE ALPHA/NUMERIC CODE
STUD SIZE, PER KEY
ACOUSTICAL SOUND BATT INSULATION INDICATED BY "S" IF REQUIRED

STUD KEY SIZE

1 = 7/8" STEEL
2 = 2 1/2" STEEL
3 = 3 5/8" STEEL
4 = 4" STEEL
6 = 6" STEEL
8 = 8" STEEL
12 = 12" STEEL

ABBREVIATIONS

ADJ	ADJUSTABLE
ADA	AMERICANS WITH DISABILITY ACT
AFF	ABOVE FINISHED FLOOR
AIB	AIR INFILTRATION BARRIER
AHJ	AUTHORITY HAVING JURISDICTION
APPROX	APPROXIMATELY
ARGWB	ABUSE RESISTANT GYPSUM WALL BOARD
BD	BOARD
BLKG	BLOCKING
BM	BEAM
BO	BOTTOM OF
BR	BLAST RESISTANT
BUR	BUILT UP ROOF
CJ	CONTROL JOINT
CL	CENTERLINE
CLG	CEILING
CMU	CONCRETE MASONRY UNIT
COL	COLUMN
CONC	CONCRETE
CONT	CONITINUOUS
CPT	CARPET
CT	CERAMIC TILE
DBL	DOUBLE
DEG	DEGREE
DEMO	DEMOLITION
DIA	DIAMETER
DISP	DISPENSER
DN	DOWN
DW	DISHWASHER
EA	EACH
EL	ELEVATION
EJ	EXPANSION JOINT
ELEC	ELECTRICAL
ENCL	ENCLOSURE
EQ	EQUAL
EXIST	EXISTING
FD	FLOOR DRAIN
FDN	FOUNDATION
FE	FIRE EXTINGUISHER
FF	FACE OF FINISH
FIN	FINISH
FL	FLOOR
FOF	FACE OF FINISH
FOS	FACE OF STUD
FR	FIRE RESISTANT
FURR	FURRING
GA	GAUGE
GALV	GALVANIZED
GLB	GLULAM BEAM
GB	GRAB BAR
GL	GLASS
GWB	GYPSUM WALL BOARD
HB	HOSE BIB
HRDW	HARDWARE
HM	HOLLOW METAL
HORIZ	HORIZONTAL
HGT	HEIGHT
ID	INSIDE DIAMETER
INSUL	INSULATION
INT	INTERIOR
JT	JOINT
JST	JOIST
LAM	LAMINATE
LAN	LOCAL AREA NETWORK
LAV	LAVATORY
MAT	MATERIAL
MAX	MAXIMUM
MECH	MECHANICAL
MFR	MANUFACTURER
MIN	MINIMUM
MISC	MISCELLANEOUS
MTD	MOUNTED
MR	MOISTURE RESISTANT
MTL	METAL
MW	MICROWAVE
N/A	NOT APPLICABLE
NFS	NON-FROST SUSCEPTIBLE
NIC	NOT IN CONTRACT
NR	NOT RATED
NTS	NOT TO SCALE
NOM	NOMINAL
OC	ON CENTER
OD	OUTSIDE DIAMETER
OFOI	OWNER FURNISHED/ OWNER INSTALLED
OH	OVERHEAD
OPNG	OPENING
OPP	OPPOSITE
PEMB	PRE-ENGINEERED METAL BUILDNG
PLAM	PLASTIC LAMINATE
PL	PLATE
PLYWD	PLYWOOD
PNT	PAINT
PR	PAIR
PREP	PREPARATION
PT	POINT
QT	QUARRY TILE
RAD	RADIUS
RB	RUBBER BASE
RD	ROOF DRAIN
REF	REFERENCE
REFL	REFLECTED
REINF	REINFORCEING
REQD	REQUIRED
REV	REVISED
RM	ROOMS
RO	ROUGH OPENING
SAC	SUSPENDED ACC TILE
SCWD	SOLID CORE WOOD
SE	SECURED DOOR
SCHD	SCHEDULE
SF	SQUARE FEET
SHT	SHEET
SHTG	SHEATHING
SHWR	SHOWER
SIM	SIMILAR
SM	SQUARE METERS
SPEC	SPECIFICATION
SQ	SQUARE
SS	STAINLESS STEEEL
STL	STEEL
STRUCT	STRUCTURAL
SUSP	SUSPENDED
SSMR	STANDING SEAM METAL ROOF
SV	SHEET VINYL
SYM	SYMMETRICAL
TB	THERMALLY BROKEN
TBD	TO BE DETERMINED
TEL	TELEPHONE
TEMP	TEMPERED
THRESH	THRESHOLD
THRU	THROUGH
TO	TOP OF
TOS	TOP OF STRUCTURE
TPD	TOILET PAPER DISPENSER
TS	TUBE STEEL
TYP	TYPICAL
T&G	TONGU AND GROOVE
TV	TELEVISION
UL	UNDERWRITERS LABORATORIES
UON	UNLESS OTHERWISE NOTED
VIF	VERIFY IN FIELD
WD	WOOD
WTMD	WALK THRU METAL DETECTOR

*NOT ALL ABBREVIATIONS ARE USED WITHIN THIS PROJECT

Michael Baker INTERNATIONAL AECC103
3900 C Street, Suite 900
Anchorage, Alaska 99503
907.273.1600 www.mbakerintl.com

COFFMAN ENGINEERS AECC249
800 E Street
Anchorage, Alaska 99501
907.276.6664 www.coffman.com

STATE OF ALASKA
WILLIAM KONTESS
A-11018
9-11-2018
REGISTERED PROFESSIONAL ENGINEER

CITY OF VALDEZ, ALASKA
OPPORTUNITIES IN EVERY SEASON

VALDEZ ANIMAL SHELTER
KENNEL RENOVATION
VALDEZ, ALASKA

NO.	DATE	REVISION	BY	APVD

CLIENT PROJECT:	16-350-1606
CAD DWG FILE:	A-001.DWG
DRAWN BY:	J. MONROY
CHECKED BY:	P. LANGLEY
PROJECT NUMBER:	167716

COPYRIGHT:
MICHAEL BAKER INTERNATIONAL

SHEET TITLE
ARCHITECTURAL GENERAL NOTES, ASSEMBLIES, LEGEND, MATERIALS AND ABBREVIATIONS

A-001

SHEET 6 OF 25

IF SHEET IS LESS THAN 22"x34" IT IS A REDUCED PRINT - SCALE ACCORDINGLY

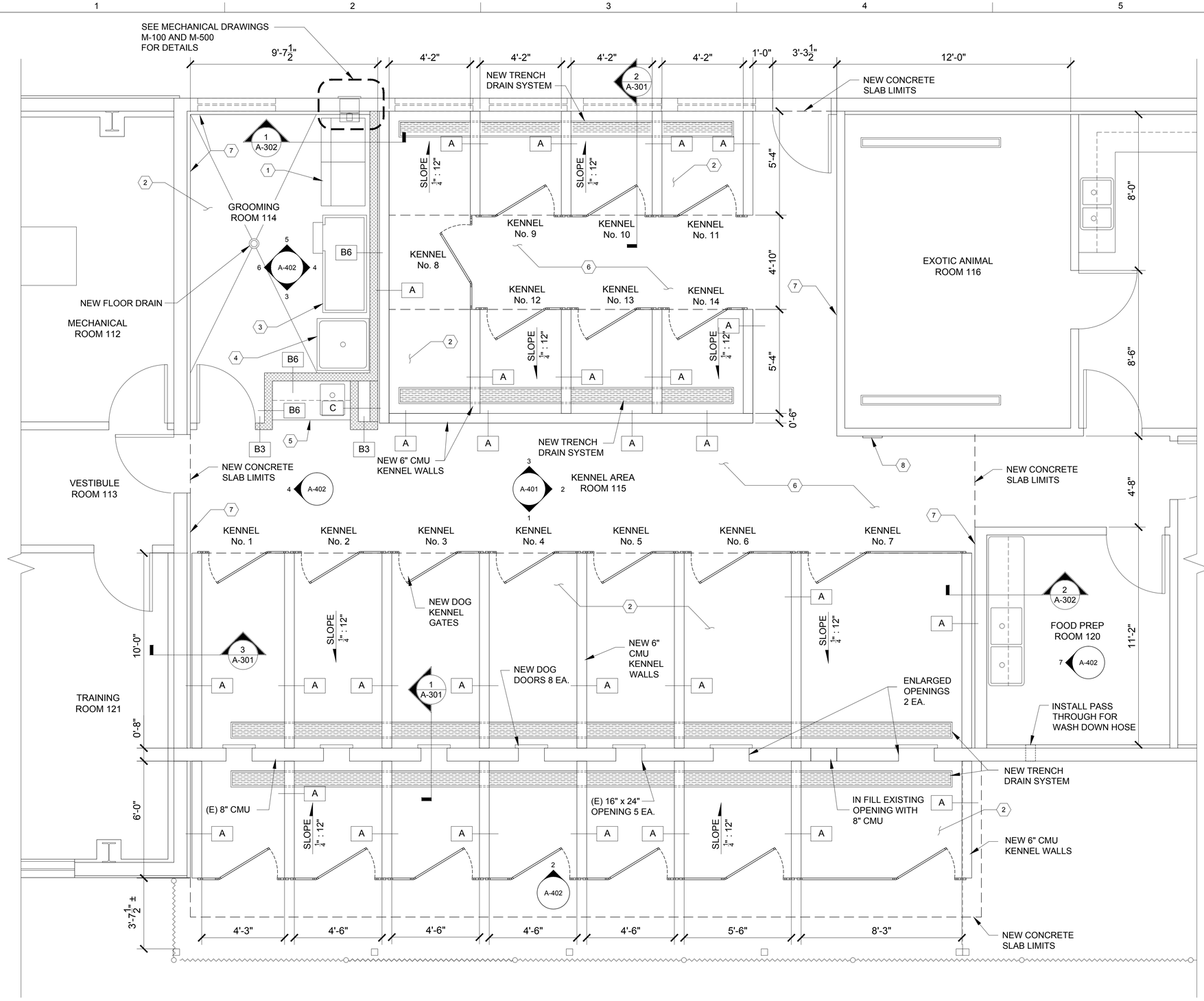

1 KENNEL FLOOR PLAN - NEW

3/8" = 1'-0"

PLAN NORTH

GENERAL NOTES

1. ALL DIMENSIONS ARE IN FEET/INCHES, UON.
2. THESE GENERAL NOTES ARE NOT INTENDED TO REPLACE SPECIFICATIONS - REFER TO SPECIFICATION REQUIREMENTS IN ADDITION TO GENERAL NOTES.
3. ROOM AREAS AND PERIMETERS ARE APPROXIMATE AND FOR REFERENCE ONLY - VERIFY QUANTITIES AND DIMENSIONS IN FIELD.
4. DO NOT SCALE DIMENSIONS FROM DRAWINGS - REQUEST NECESSARY DIMENSIONS NOT SHOWN ON THE DRAWINGS FROM THE ARCHITECT.
5. ALL DIMENSIONS ARE TO FOS AND CENTER OF DOORS AND OPENINGS, UON. ALL NON-DIMENSIONED DOOR LOCATIONS SHALL BE OFFSET 4" FROM THE ADJACENT WALL TO THE HINGE SIDE OF THE DOOR OPENING.
6. CONTRACTOR SHALL BE RESPONSIBLE FOR SCHEDULING AND COORDINATING THE WORK OF SUB-CONTRACTORS - THE CONTRACTOR SHALL BE RESPONSIBLE TO COORDINATE WITH THE BUILDING OWNER, TENANT, OR THE DESIGNATED REPRESENTATIVE FOR THE DELIVER AND INSTALLATION OF ITEMS BEING PROVIDED AND INSTALLED BY OTHERS.
7. MECHANICAL, PLUMBING AND ELECTRICAL WORK RELATED TO THE DEMOLITION AND NEW INSTALLATION OF COMPONENTS SHALL COMPLY WITH ALL APPLICABLE CODES.
8. ALL MATERIALS, FABRICATION, AND INSTALLATION SHALL COMPLY WITH THE APPLICABLE REQUIREMENTS AND SPECIFICATIONS FOR EACH DIVISION OF WORK.
9. CONTRACTOR SHALL BE RESPONSIBLE FOR TIMELY ORDERING OF MATERIALS INCLUDED IN THESE CONTRACT DOCUMENTS.
10. CONTRACTOR SHALL CLEAN, PATCH AND REPAIR ALL SURFACES DAMAGED BY DEMOLITION, ALTERATION OR INSTALLATION OF THE WORK.
11. CONTRACTOR SHALL PREPARE ALL WALLS AND PARTITIONS AS REQUIRED BY MANUFACTURERS TO RECEIVE THE SPECIFIED FINISHES.
12. ALL REQUESTS FOR INFORMATION PROMPTED BY THE AUTHORITY HAVING JURISDICTION (AHJ) SHALL INCLUDE A COPY OF AHJ'S COMMENTS AND THE BUILDING INSPECTOR'S FIELD REPORT TO ENSURE AN ACCURATE AND TIMELY RESPONSE.

KEY NOTES

1. SALVAGE AND RE-INSTALL WASHER AND DRYER.
2. DEMO EXISTING CONCRETE SLAB. INSTALL NEW SLOPED TO DRAIN.
3. INSTALL NEW DOG WASH TUB.
4. INSTALL NEW FLOOR SINK AND EMERGENCY SHOWER AND EYE/FACE WASH.
5. SALVAGE AND RE-INSTALL CABINET AND SINK.
6. DEMO EXISTING CONCRETE SLAB. INSTALL NEW.
7. INSTALL 5/8" MARINE PLYWOOD TO 6'-0" A.F.F.
8. EXISTING FIRE EXTINGUISHER CABINET.

STRUCTURAL NOTES

1. SEE DRAWING A-302 FOR STRUCTURAL NOTES.

Michael Baker INTERNATIONAL AECC103
3900 C Street, Suite 900
Anchorage, Alaska 99503
907.273.1600 www.mbakerintl.com

COFFMAN ENGINEERS AECC249
800 E Street
Anchorage, Alaska 99501
907.276.6664 www.coffman.com

STATE OF ALASKA
WILLIAM KONTESS
A-11018
9-11-2018
REGISTERED PROFESSIONAL ARCHITECT

CITY OF VALDEZ, ALASKA
OPPORTUNITIES IN EVERY SEASON

VALDEZ ANIMAL SHELTER
KENNEL RENOVATION
VALDEZ, ALASKA

NO.	DATE	REVISION	BY	APV'D

CLIENT PROJECT:	16-350-1606
CAD DWG FILE:	A-101.DWG
DRAWN BY:	DRAWN-BY
CHECKED BY:	CHECKED-BY
PROJECT NUMBER:	167167

COPYRIGHT:
MICHAEL BAKER INTERNATIONAL

SHEET TITLE
ARCHITECTURAL
KENNEL FLOOR PLAN
NEW LAYOUT

A-101

SHEET 7 OF 25

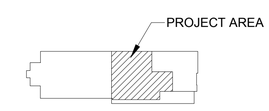

KEY PLAN
NOT TO SCALE

IF SHEET IS LESS THAN 22"x34" IT IS A REDUCED PRINT - SCALE ACCORDINGLY

GENERAL NOTES

1. ALL DIMENSIONS ARE IN FEET/INCHES, UON.
2. THESE GENERAL NOTES ARE NOT INTENDED TO REPLACE SPECIFICATIONS - REFER TO SPECIFICATION REQUIREMENTS IN ADDITION TO GENERAL NOTES.
3. ROOM AREAS AND PERIMETERS ARE APPROXIMATE AND FOR REFERENCE ONLY - VERIFY QUANTITIES AND DIMENSIONS IN FIELD.
4. DO NOT SCALE DIMENSIONS FROM DRAWINGS - REQUEST NECESSARY DIMENSIONS NOT SHOWN ON THE DRAWINGS FROM THE ARCHITECT.
5. ALL DIMENSIONS ARE TO FOS AND CENTER OF DOORS AND OPENINGS, UON. ALL NON-DIMENSIONED DOOR LOCATIONS SHALL BE OFFSET 4" FROM THE ADJACENT WALL TO THE HINGE SIDE OF THE DOOR OPENING.
6. CONTRACTOR SHALL BE RESPONSIBLE FOR SCHEDULING AND COORDINATING THE WORK OF SUB-CONTRACTORS - THE CONTRACTOR SHALL BE RESPONSIBLE TO COORDINATE WITH THE BUILDING OWNER, TENANT, OR THE DESIGNATED REPRESENTATIVE FOR THE DELIVER AND INSTALLATION OF ITEMS BEING PROVIDED AND INSTALLED BY OTHERS.
7. MECHANICAL, PLUMBING AND ELECTRICAL WORK RELATED TO THE DEMOLITION AND NEW INSTALLATION OF COMPONENTS SHALL COMPLY WITH ALL APPLICABLE CODES.
8. ALL MATERIALS, FABRICATION, AND INSTALLATION SHALL COMPLY WITH THE APPLICABLE REQUIREMENTS AND SPECIFICATIONS FOR EACH DIVISION OF WORK.
9. CONTRACTOR SHALL BE RESPONSIBLE FOR TIMELY ORDERING OF MATERIALS INCLUDED IN THESE CONTRACT DOCUMENTS.
10. CONTRACTOR SHALL CLEAN, PATCH AND REPAIR ALL SURFACES DAMAGED BY DEMOLITION, ALTERATION OR INSTALLATION OF THE WORK.
11. CONTRACTOR SHALL PREPARE ALL WALLS AND PARTITIONS AS REQUIRED BY MANUFACTURERS TO RECEIVE THE SPECIFIED FINISHES.
12. ALL REQUESTS FOR INFORMATION PROMPTED BY THE AUTHORITY HAVING JURISDICTION (AHJ) SHALL INCLUDE A COPY OF AHJ'S COMMENTS AND THE BUILDING INSPECTOR'S FIELD REPORT TO ENSURE AN ACCURATE AND TIMELY RESPONSE.

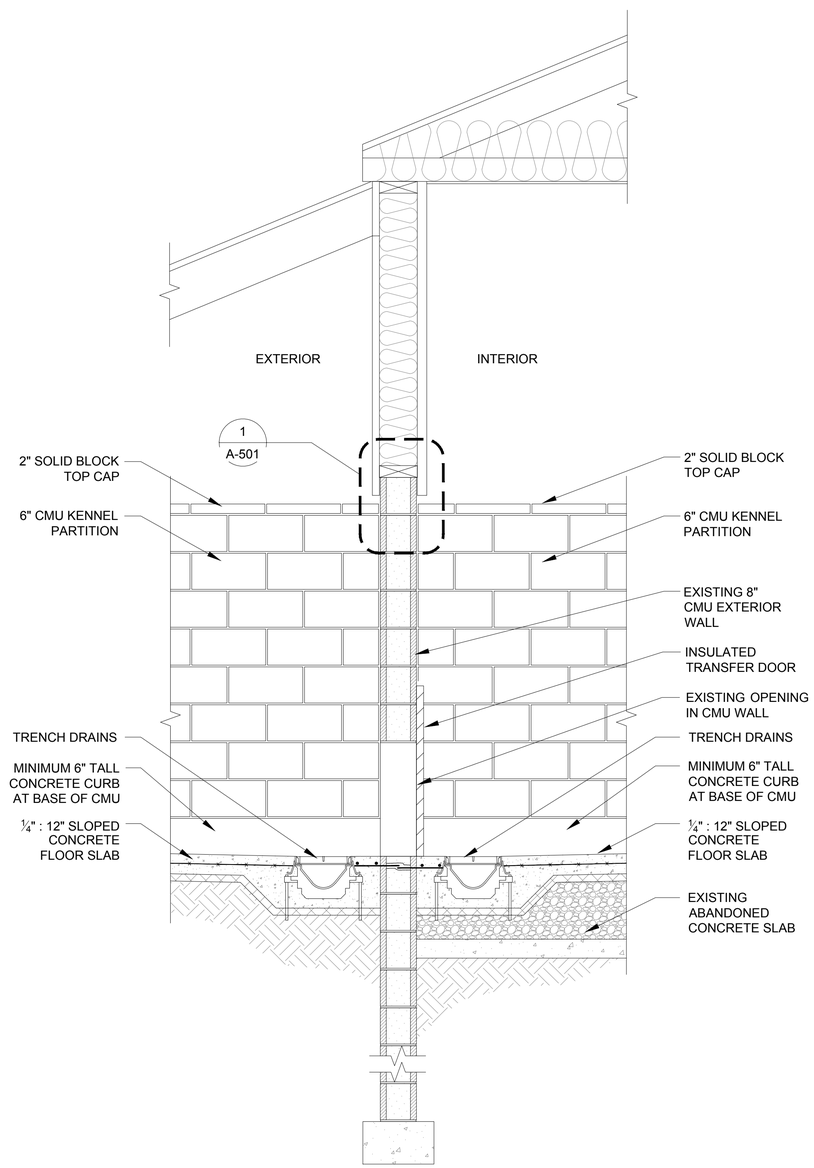

1 SOUTH EXTERIOR WALL SECTION
3/4" = 1'-0"

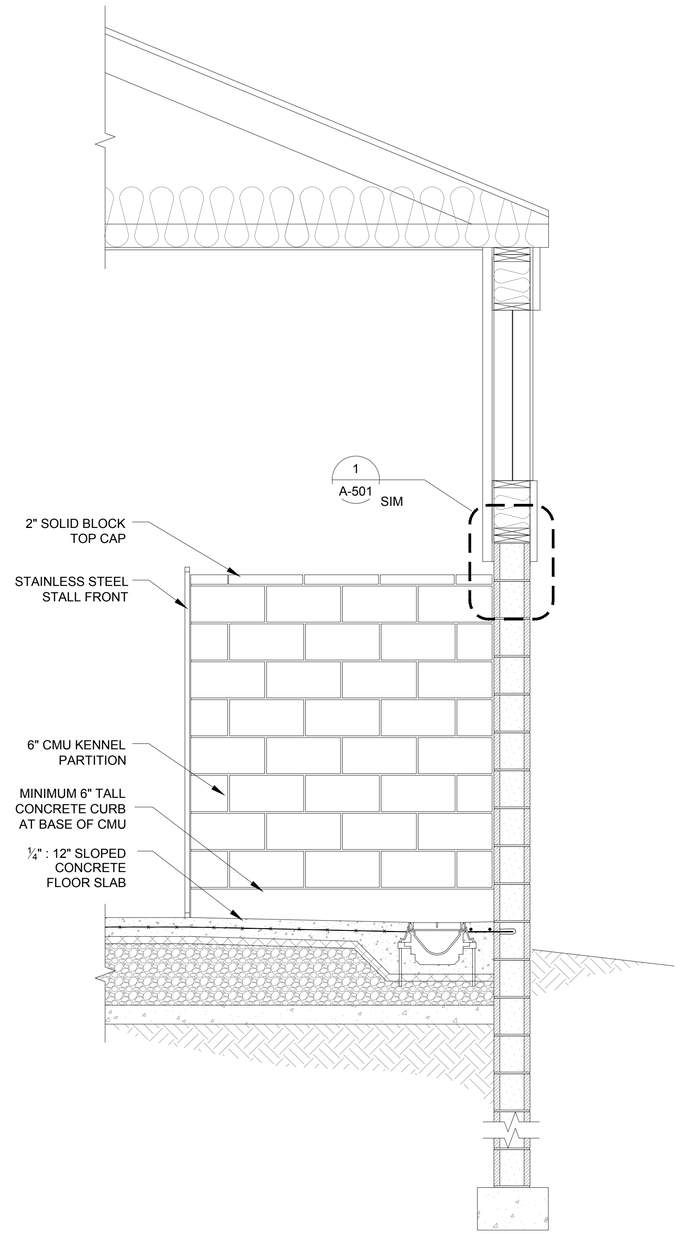

2 NORTH EXTERIOR WALL SECTION
3/4" = 1'-0"

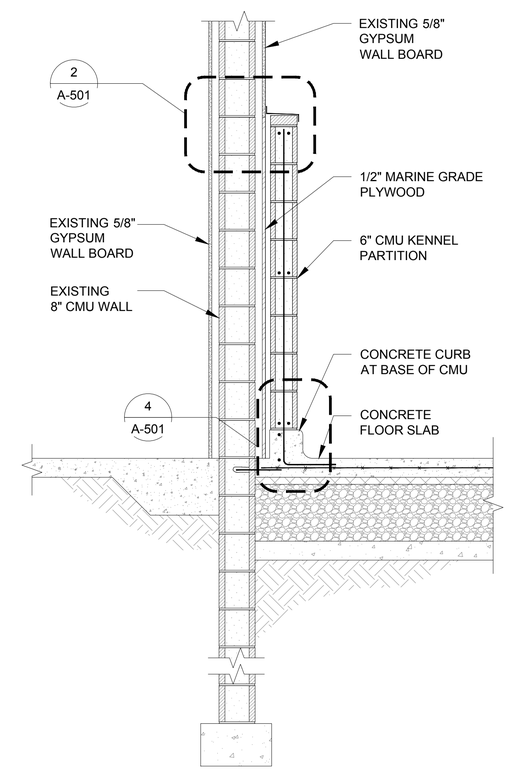

3 WEST PARTIAL WALL SECTION
3/4" = 1'-0"

Michael Baker INTERNATIONAL AECC103
3900 C Street, Suite 900
Anchorage, Alaska 99503
907.273.1600 www.mbakerintl.com

COFFMAN ENGINEERS AECC249
800 E Street
Anchorage, Alaska 99501
907.276.6664 www.coffman.com

STATE OF ALASKA
WILLIAM KONTESS
A-11018
9-11-2018
REGISTERED PROFESSIONAL ENGINEER

CITY OF VALDEZ, ALASKA
OPPORTUNITIES IN EVERY SEASON

VALDEZ ANIMAL SHELTER
KENNEL RENOVATION
VALDEZ, ALASKA

NO.	DATE	REVISION	BY	APVD

CLIENT PROJECT:	16-350-1606
CAD DWG FILE:	A-301.DWG
DRAWN BY:	J. MONROY
CHECKED BY:	P. LANGLEY
PROJECT NUMBER:	167716

COPYRIGHT:
MICHAEL BAKER INTERNATIONAL

SHEET TITLE
ARCHITECTURAL
WALL SECTIONS

A-301

SHEET 8 OF 25

IF SHEET IS LESS THAN 22"x34" IT IS A REDUCED PRINT - SCALE ACCORDINGLY

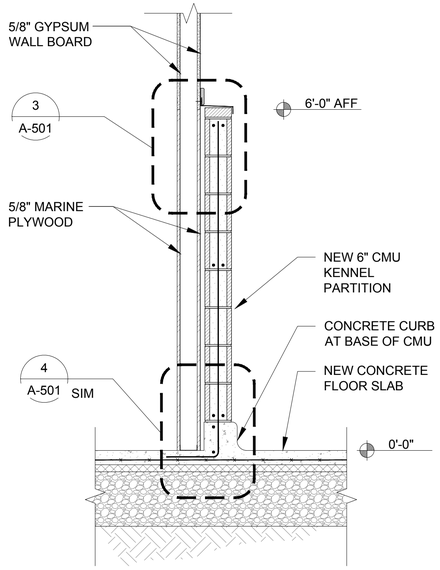

1 PARTIAL WALL SECTION AT GROOMING ROOM

3/4" = 1'-0"

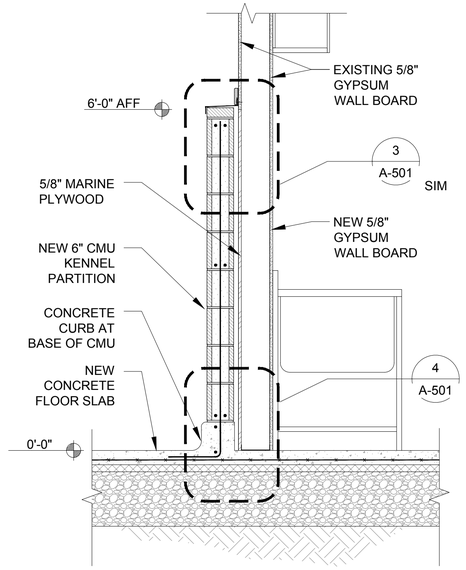

2 PARTIAL WALL SECTION AT FOOD PREP ROOM

3/4" = 1'-0"

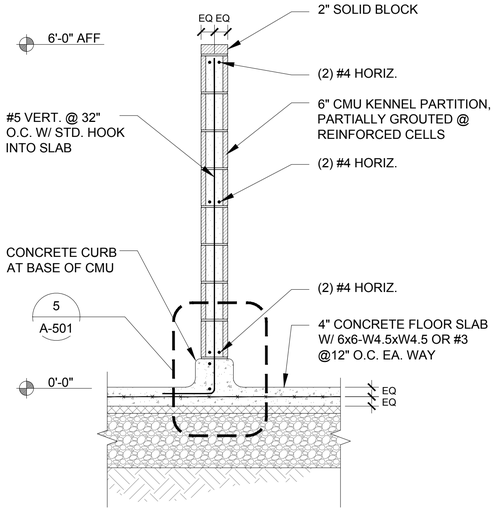

3 TYPICAL KENNEL PARTITION WALL SECTION

3/4" = 1'-0"

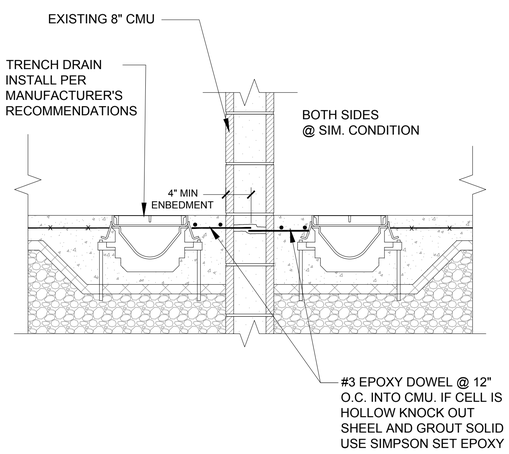

4 SLAB AT WALL CONNECTION DETAIL

1" = 1'-0"

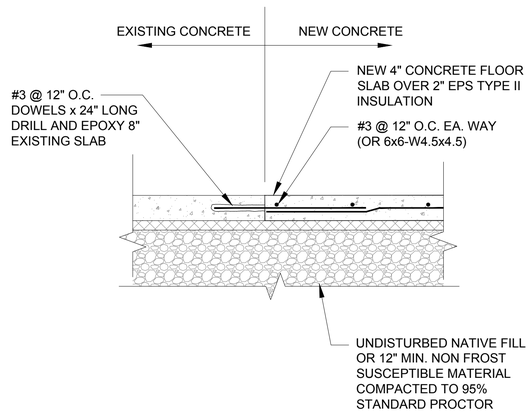

5 NEW TO EXISTING SLAB CONNECTION DETAIL

1" = 1'-0"

STATE OF ALASKA 49TH GAVIN DAVID FITZSIMMONS No. SE101517 REGISTERED PROFESSIONAL ENGINEER 11/8/19

STRUCTURAL ONLY

GENERAL NOTES

1. ALL DIMENSIONS ARE IN FEET/INCHES, UON.
2. THESE GENERAL NOTES ARE NOT INTENDED TO REPLACE SPECIFICATIONS - REFER TO SPECIFICATION REQUIREMENTS IN ADDITION TO GENERAL NOTES.
3. ROOM AREAS AND PERIMETERS ARE APPROXIMATE AND FOR REFERENCE ONLY - VERIFY QUANTITIES AND DIMENSIONS IN FIELD.
4. DO NOT SCALE DIMENSIONS FROM DRAWINGS - REQUEST NECESSARY DIMENSIONS NOT SHOWN ON THE DRAWINGS FROM THE ARCHITECT.
5. ALL DIMENSIONS ARE TO FOS AND CENTER OF DOORS AND OPENINGS, UON. ALL NON-DIMENSIONED DOOR LOCATIONS SHALL BE OFFSET 4" FROM THE ADJACENT WALL TO THE HINGE SIDE OF THE DOOR OPENING.
6. CONTRACTOR SHALL BE RESPONSIBLE FOR SCHEDULING AND COORDINATING THE WORK OF SUB-CONTRACTORS - THE CONTRACTOR SHALL BE RESPONSIBLE TO COORDINATE WITH THE BUILDING OWNER, TENANT, OR THE DESIGNATED REPRESENTATIVE FOR THE DELIVER AND INSTALLATION OF ITEMS BEING PROVIDED AND INSTALLED BY OTHERS.
7. MECHANICAL, PLUMBING AND ELECTRICAL WORK RELATED TO THE DEMOLITION AND NEW INSTALLATION OF COMPONENTS SHALL COMPLY WITH ALL APPLICABLE CODES.
8. ALL MATERIALS, FABRICATION, AND INSTALLATION SHALL COMPLY WITH THE APPLICABLE REQUIREMENTS AND SPECIFICATIONS FOR EACH DIVISION OF WORK.
9. CONTRACTOR SHALL BE RESPONSIBLE FOR TIMELY ORDERING OF MATERIALS INCLUDED IN THESE CONTRACT DOCUMENTS.
10. CONTRACTOR SHALL CLEAN, PATCH AND REPAIR ALL SURFACES DAMAGED BY DEMOLITION, ALTERATION OR INSTALLATION OF THE WORK.
11. CONTRACTOR SHALL PREPARE ALL WALLS AND PARTITIONS AS REQUIRED BY MANUFACTURERS TO RECEIVE THE SPECIFIED FINISHES.
12. ALL REQUESTS FOR INFORMATION PROMPTED BY THE AUTHORITY HAVING JURISDICTION (AHJ) SHALL INCLUDE A COPY OF AHJ'S COMMENTS AND THE BUILDING INSPECTOR'S FIELD REPORT TO ENSURE AN ACCURATE AND TIMELY RESPONSE.

STRUCTURAL NOTES

DESIGN CRITERIA

DC-1 GOVERNING BUILDING CODES:
A. IBC 2015 INTERNATIONAL BUILDING CODE W/ LOCAL AMENDMENTS
B. ASCE 7-10 MINIMUM DESIGN LOADS FOR BUILDINGS AND OTHER STRUCTURES

DC-2 LATERAL LOAD DESIGN CRITERIA
A. WIND DESIGN CRITERIA
1. BASIC WIND SPEED (V) = 137 MPH
2. EXPOSURE CATEGORY C
3. INTERNAL PRESSURE COEFFICIENT +/- 0.18

B. SEISMIC DESIGN CRITERIA
1. RISK CATEGORY II
2. SEISMIC IMPORTANCE FACTOR (LE) = 1.0
3. SITE CLASS D (ASSUMED)
4. SEISMIC DESIGN CATEGORY D
5. SHORT PERIOD SPECTRAL ACCELERATION (Ss) = 1.500 G
6. ONE SECOND SPECTRAL ACCELERATION (S1) = 0.771 G
7. SHORT PERIOD RESPONSE ACCELERATION (Sds) = 1.000 G
8. ONE SECOND RESPONSE ACCELERATION (Sd1) = 0.771 G

GENERAL

G-1 METHODS, PROCEDURES AND SEQUENCES OF CONSTRUCTION ARE THE RESPONSIBILITY OF THE CONTRACTOR. THE CONTRACTOR IS RESPONSIBLE FOR IDENTIFYING AND IMPLEMENTING THE NECESSARY PRECAUTIONS TO MAINTAIN AND ENSURE THE INTEGRITY OF THE STRUCTURE AT ALL STAGES OF CONSTRUCTION.

G-2 TEMPORARY BRACING, SHEETING, SHORING, ETC, REQUIRED TO ENSURE THE STRUCTURAL INTEGRITY/STABILITY OF THE EXISTING BUILDINGS, SIDEWALKS, UTILITIES, ETC, DURING CONSTRUCTION IS THE RESPONSIBILITY OF THE CONTRACTOR AND SHALL BE DESIGNED BY A REGISTERED PROFESSIONAL ENGINEER EMPLOYED BY THE CONTRACTOR.

G-3 IMPLEMENTATION OF JOB SITE SAFETY IS THE SOLE RESPONSIBILITY OF THE CONTRACTOR.

G-4 SLEEVES OR BLOCK-OUTS REQUIRED FOR PASSAGE OF DUCTWORK, PIPING, DRAINS, CONDUIT, ETC, IN ADDITION TO ANCHORS AND HANGERS REQUIRED FOR EQUIPMENT AND PIPING AND UNDER-SLAB UTILITIES ARE NOT SPECIFICALLY, NOR GENERALLY, INDICATED ON THE STRUCTURAL DRAWINGS. THE CONTRACTOR IS RESPONSIBLE FOR DETERMINING SUCH REQUIREMENTS PRIOR TO FABRICATION OR ERECTION OF THE STRUCTURE. PENETRATIONS OF STRUCTURAL MEMBERS ARE SUBJECT TO APPROVAL BY THE ENGINEER

G-5 DO NOT SCALE THE DRAWINGS.

G-6 IN CASE OF CONFLICT BETWEEN THE GENERAL NOTES, SPECIFICATIONS, AND DRAWINGS, THE MOST RIGID REQUIREMENTS AS DETERMINED BY THE ENGINEER OR ARCHITECT WILL GOVERN.

G-7 WORK NOT INDICATED ON A PART OF THE DRAWINGS, BUT REASONABLY IMPLIED TO BE SIMILAR TO THAT SHOWN AT CORRESPONDING LOCATIONS, IS TO BE REPEATED.

G-8 EXISTING BUILDING INFORMATION SHOWN IS BASED UPON EXISTING BUILDING DOCUMENTS AND/OR FROM FIELD OBSERVATION. THE INFORMATION CONTAINED HEREIN MAY REQUIRE ADJUSTMENTS AND/OR MODIFICATIONS TO CONFORM TO EXISTING CONDITIONS. THE CONTRACTOR SHALL FIELD VERIFY ALL EXISTING BUILDING INFORMATION SHOWN (DIMENSIONS, ELEVATIONS, ETC) AND NOTIFY THE ENGINEER OR ARCHITECT OF ANY DISCREPANCIES PRIOR TO FABRICATION OF ANY STRUCTURAL COMPONENT.

G-9 DETAILS DESIGNATED AS "TYPICAL DETAILS," APPLY GENERALLY TO THE DRAWINGS IN AREAS WHERE CONDITIONS ARE SIMILAR TO THOSE DESCRIBED IN THE DETAILS.

G-10 THE CONTRACT DOCUMENTS SHALL TAKE PRECEDENCE OVER SHOP DRAWINGS UNLESS SPECIFICALLY NOTED OTHERWISE.

G-11 INSPECTION, TESTING, CONSTRUCTION, WORKMANSHIP AND MATERIALS SHALL CONFORM TO THE REQUIREMENTS OF THE GOVERNING BUILDING CODES AND REFERENCED STANDARDS. ASTM, ASCE, IBC, UFC, AND OTHER STANDARDS SHALL BE PER THE EDITIONS INDICATED IN THE RFP, OR AS AMENDED TO LATEST DATE IF NOT SO INDICATED.

G-12 COORDINATE ANY CONSTRUCTION SITUATION NOT COVERED BY THESE PLANS, GENERAL NOTES, OR SPECIFICATIONS WITH THE ENGINEER OF RECORD.

REINFORCED CONCRETE

C-1 REINFORCED CONCRETE WORK IS TO BE IN ACCORDANCE WITH THE AMERICAN CONCRETE INSTITUTE (ACI) EDITIONS OF:
A. ACI 301 (LATEST EDITION), "SPECIFICATIONS FOR STRUCTURAL CONCRETE FOR BUILDINGS".
B. ACI 318 (LATEST EDITION), "BUILDING CODE REQUIREMENTS FOR STRUCTURAL CONCRETE", EXCEPT AS MODIFIED BY THE IBC.
C. ACI 347 (LATEST EDITION), "RECOMMENDED PRACTICE FOR CONCRETE FORM WORK".

C-2 MIXING, TRANSPORTING, PLACING AND TESTING OF CONCRETE IS TO BE DONE IN ACCORDANCE WITH ACI 301.

C-3 PRIOR TO CONCRETE PLACEMENT, THE CONTRACTOR MUST SUBMIT CONCRETE MIX DESIGNS FOR EACH TYPE OF CONCRETE TO BE USED, PREPARED IN ACCORDANCE WITH THE SPECIFICATIONS TO THE ENGINEER FOR REVIEW.

C-4 CAST-IN-PLACE CONCRETE SHALL HAVE A MINIMUM 28 DAY COMPRESSIVE STRENGTH (f'c) OF 4000 PSI.

C-5 THE SLUMP AT POINT OF PLACEMENT IS NOT TO EXCEED 4"+/-1" AND THE WATER/CEMENT RATIO IS NOT TO EXCEED 0.45. IF ADDITIONAL SLUMP (UP TO 8") IS DESIRED FOR PUMPING, A SUPER-PLASTICIZER ADMIXTURE MAY BE ADDED.

C-6 CONCRETE EXPOSED TO WEATHER AND FREEZE/THAW SHALL BE AIR ENTRAINED FROM 5% TO 7% IN ACCORDANCE WITH ACI RECOMMENDATIONS. AIR ENTRAINING ADMIXTURE SHALL CONFORM TO ASTM C260.

C-7 CONCRETE TO BE NORMAL WEIGHT CONCRETE (150 PCF) WITH CEMENT CONFORMING TO ASTM C 150, TYPE I.

C-8 CONTINUOUS REINFORCING BARS TO BE TURNED AND LAPPED AT CORNERS AND INTERSECTIONS OF WALLS AND FOOTINGS. HOOKED BARS TO HAVE STANDARD ACI HOOKS UON.

C-9 PEA GRAVEL AGGREGATE AND/OR PLASTICIZER MAY BE USED IN CONGESTED AREAS WHEN REQUIRED TO PROPERLY FILL ALL VOIDS AND/OR FOR WORKABILITY. (CONTRACTOR'S OPTION).

C-10 CONCRETE SHALL BE PROPERLY VIBRATED DURING PLACEMENT.

C-11 PRIOR TO PLACING CONCRETE, CHECK WITH ALL TRADES TO INSURE PROPER PLACEMENT OF OPENINGS, BLOCK OUTS, SLEEVES, CURBS, CONDUITS, BOLTS, INSERTS, EMBEDS, DOWELS, ETC. ANCHOR BOLTS AND DOWELS SHALL BE PLACED PRIOR TO CASTING CONCRETE.

C-12 ALL CONTACT SURFACES, NEW OR EXISTING, AT CONSTRUCTION JOINTS SHALL BE INTENTIONALLY ROUGHENED PRIOR TO CASTING ADJACENT POUR.

C-13 OPENINGS IN FLOORS AND/OR WALLS SHALL HAVE ADDITIONAL REINFORCING AROUND ALL SIDES OF THE OPENING EQUIVALENT TO THE BARS CUT BY THE OPENING WITH HALF ON EACH SIDE OF THE OPENING OR 2-#5 [2#16] BARS, WHICHEVER IS GREATER, UNLESS NOTED OTHERWISE. BARS PARALLEL TO THE PRINCIPAL REINFORCING SHALL RUN FULL LENGTH OF THE SPAN. BARS IN THE OTHER DIRECTION SHALL RUN 24 INCHES BEYOND THE EDGE OF THE OPENING OR END WITH A STANDARD HOOK. ALSO PROVIDE 2-#5 X 4'-0" DIAGONAL BARS AT EACH CORNER OF EACH OPENING.

C-14 ALL BOLT HOLES TO BE FILLED WITH EPOXY SHALL BE WIRE BRUSHED AND CLEANED WITH COMPRESSED AIR PER MANUFACTURER'S RECOMMENDATIONS.

C-15 INTERIOR SLABS ON GRADE SHALL BE THICKNESS AS SHOWN ON PLAN AND SHALL BE REINFORCED AS INDICATED ON THE DRAWINGS. PROVIDE CHAIRS WITH SAND PLATES FOR PROPER PLACEMENT OF REINFORCING.

C-16 CONCRETE SLABS SHALL BE CURED BY METHOD COMPATIBLE WITH SPECIFIED FLOOR FINISH. WHERE ACCEPTABLE USE A LIQUID MEMBRANE-CURING COMPOUND AT THE MANUFACTURER'S RECOMMENDED COVERAGE.

C-17 PROVIDE FINISHED SLAB-ON-GRADE WITH OVERALL VALUES OF FLATNESS F(f)=35 AND LEVELNESS F(l)=25 ALONG WITH LOCAL VALUES OF FLATNESS F(s)=24 AND LEVELNESS F(l)=17.

C-18 SLEEVES, INSERTS, MECHANICAL OPENINGS, CONDUITS, PIPES, RECESSES. DEPRESSIONS, CURBS AND OTHER EMBEDDED ITEMS TO BE PROVIDED FOR AS SHOWN ON THE ARCHITECTURAL, MECHANICAL AND ELECTRICAL DRAWINGS AND AS REQUIRED BY EQUIPMENT MANUFACTURERS. INSTALLATION OF THESE ITEMS TO BE COORDINATED AND PROVIDED FOR PRIOR TO PLACING CONCRETE.

MASONRY

M-1 MASONRY WORK MUST BE IN CONFORMANCE WITH THE AMERICAN CONCRETE INSTITUTE (ACI) "BUILDING CODE FOR MASONRY STRUCTURES-ACI 530" (LATEST EDITION) AND THE "SPECIFICATIONS FOR MASONRY STRUCTURES-ACI 530.1" (LATEST EDITION) AS MODIFIED BY THE IBC AND LOCAL AMENDMENTS.

M-2 ALL MORTAR TO CONFORM TO ASTM C 270, TYPE <M OR S.
A. PORTLAND CEMENT: ASTM C 150, TYPE I.
B. LIME: ASTM C 207

M-3 GROUT IS TO CONFORM TO ASTM C 476 AND HAVE A MINIMUM COMPRESSIVE STRENGTH OF 3000 PSI.
A. SLUMP: 8 TO 10 INCHES.
B. MAXIMUM AGGREGATE SIZE: 3/8".

M-4 CONCRETE MASONRY TO HAVE A MINIMUM 28 DAY COMPRESSIVE STRENGTH OF MASONRY (f'm) EQUAL TO 1,500 PSI AND:
A. HOLLOW BLOCK: ASTM C 90, NORMAL WT, TYPE I (MOISTURE CONTROLLED).
B. SOLID BLOCKS: ASTM C 90.

M-5 HIGH STRENGTH (OPEN END BLOCK) UNITS ARE TO CONFORM TO ASTM C90, NORMAL WEIGHT, TYPE I (MOISTURE CONTROLLED), HAVING A MINIMUM 28 DAY COMPRESSIVE STRENGTH OF 3,000 PSI ON THE NET AREA.

M-6 GROUT ALL REINFORCED CELLS SOLID WITH GROUT. PROVIDE BAR SPACERS AS REQUIRED TO PROPERLY LOCATE REINFORCING WITHIN CMU CELLS.

M-7 ALL MASONRY TO BE CONSTRUCTED USING A RUNNING BOND PATTERN. FULL BED AND HEAD JOINTS MUST BE USED.

M-8 GROUT CELLS OF CMU SOLID FOR ALL MASONRY BOND BEAMS AND CELLS WITH VERTICAL REINFORCEMENT.

M-9 DOWEL REINFORCED MASONRY WALLS TO SLAB THROUGH CURB AS SHOWN. SIZE DOWELS TO MATCH WALL REINFORCEMENT OR USE FULL HEIGHT DOWELS, AT CONTRACTOR'S OPTION. LOCATE DOWELS IN CELLS TO CONTAIN WALL REINFORCEMENT. LAP DOWELS AND WALL REINFORCEMENT A MINIMUM OF 48 BAR DIAMETERS UNO.

M-10 DURING CONSTRUCTION, COVER AND PROTECT THE TOPS OF MASONRY WALLS AT THE END OF EACH DAY.

M-11 PENETRATIONS THROUGH ANY MASONRY WALL SHALL BE BUILT INTO THE WALL AS THE WALL IS BEING CONSTRUCTED AND SHALL BE REVIEWED BY THE ENGINEER PRIOR TO INSTALLATION.

M-12 WHERE HORIZONTAL REINFORCING BARS JOIN CONCRETE WALLS, COLUMNS, OR PILASTERS, REINFORCING SHALL BE CONTINUOUS. ALSO, A KEY SHALL BE PROVIDED BETWEEN THE MASONRY AND THE CONCRETE. FILL KEY WITH GROUT.

REINFORCING STEEL

R-1 REINFORCING STEEL SHALL COMPLY WITH:
A. CONCRETE REINFORCING STEEL INSTITUTE (CRSI) "MANUAL OF STANDARD PRACTICE".
B. AMERICAN CONCRETE INSTITUTE, ACI 315 (OR SP-66) "DETAILING MANUAL.
C. AMERICAN CONCRETE INSTITUTE, ACI 530.1, "SPECIFICATIONS FOR MASONRY STRUCTURES".

R-2 REINFORCING STEEL SHALL BE DEFORMED BARS AND SHALL CONFORM TO ASTM A615, GRADE 60 , WITH A DESIGN YIELD STRENGTH OF 60,000 PSI.

R-3 WELDED WIRE REINFORCEMENT SHALL CONFORM TO ASTM A185. IT SHALL BE SUPPLIED IN FLAT SHEETS ONLY. LAP WELDED WIRE REINFORCEMENT TWO FULL MESH LENGTHS (OR 6" MINIMUM) AT SPLICES AND WIRE TOGETHER.

R-4 REINFORCING SHALL BE DETAILED, FABRICATED, BOLSTERED, AND SUPPORTED PER ACI 315.

R-5 REINFORCING STEEL SHALL BE FREE OF LOOSE FLAKY RUST, SCALE, GREASE, OIL, DIRT, AND OTHER MATERIALS WHICH MIGHT AFFECT OR IMPAIR BOND.

R-6 BENDS SHALL BE MADE COLD. DO NOT USE HEAT. BENDS SHALL BE DONE IN THE FABRICATOR'S SHOP UNLESS SPECIFICALLY NOTED FOR THE FIELD. DO NOT UN-BEND OR RE-BEND A PREVIOUSLY BENT BAR.

R-7 REINFORCING STEEL IN MASONRY SHALL BE PLACED PRIOR TO GROUTING AND SHALL BE PLACED, POSITIONED, AND LOCATED ACCORDING TO THE DRAWINGS. IT SHALL BE SECURED AGAINST DISPLACEMENT AT INTERVALS NOT TO EXCEED 200 BAR DIAMETERS OR TEN FEET.

Michael Baker INTERNATIONAL AECC103
3900 C Street, Suite 900
Anchorage, Alaska 99503
907.273.1600 www.mbakerintl.com

COFFMAN ENGINEERS AECC249
800 E Street
Anchorage, Alaska 99501
907.276.6664 www.coffman.com

STATE OF ALASKA 49TH WILLIAM KONTESS A-11018 11-1-2019 REGISTERED PROFESSIONAL ENGINEER

CITY OF VALDEZ, ALASKA · OPPORTUNITIES IN EVERY SEASON

VALDEZ ANIMAL SHELTER
KENNEL RENOVATION
VALDEZ, ALASKA

NO.	DATE	REVISION	BY	APV'D

CLIENT PROJECT:	16-350-1606
CAD DWG FILE:	A-302.DWG
DRAWN BY:	J. MONROY
CHECKED BY:	P. LANGLEY
PROJECT NUMBER:	167716

COPYRIGHT:
MICHAEL BAKER INTERNATIONAL

SHEET TITLE

ARCHITECTURAL WALL SECTIONS, STRUCTURAL DETAILS, AND STRUCTURAL NOTES

A-302

IF SHEET IS LESS THAN 22"x34" IT IS A REDUCED PRINT - SCALE ACCORDINGLY

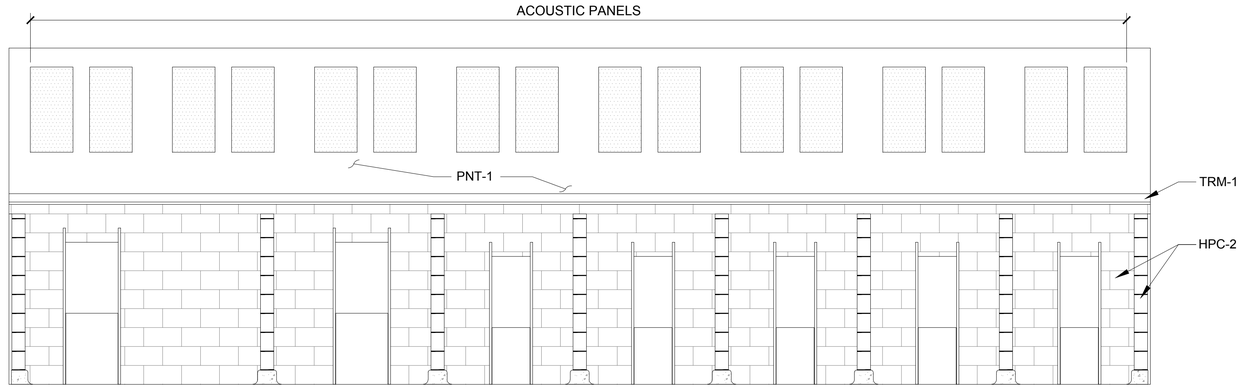

1 KENNEL AREA SOUTH INTERIOR ELEVATION
3/8" = 1'-0"

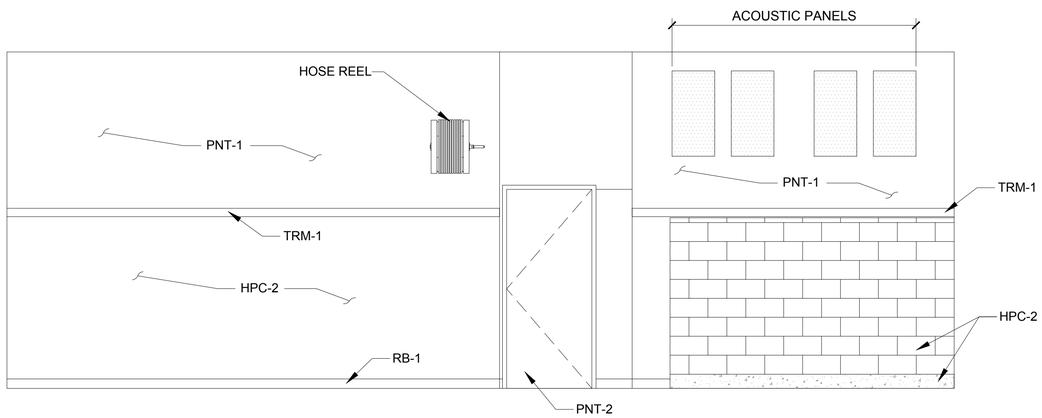

2 KENNEL AREA EAST INTERIOR ELEVATION
3/8" = 1'-0"

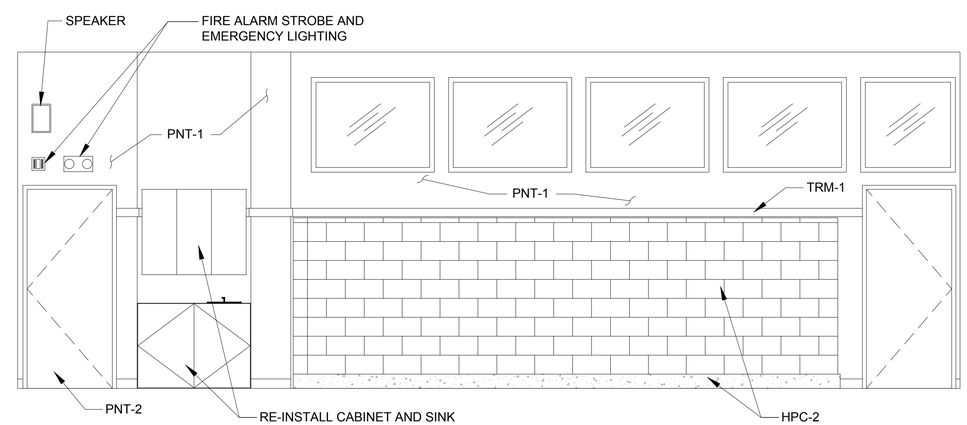

3 KENNEL AREA NORTH INTERIOR ELEVATION
3/8" = 1'-0"

ROOM FINISH SCHEDULE

ROOM NUMBER	ROOM NAME	FLOOR		WALLS				REMARKS
		FINISH	BASE	NORTH	EAST	SOUTH	WEST	
114	GROOMING ROOM	HPC-1	RB-1	PNT-1	PNT-1	PNT-1	PNT-1	ABOVE TRIM BOARD
				HPC-2	HPC-2	HPC-2	HPC-2	BELOW TRIM BOARD
115	KENNEL AREA	HPC-1	RB-1	PNT-1	PNT-1	PNT-1	PNT-1	ABOVE TRIM BOARD
				HPC-2	HPC-2	HPC-2	HPC-2	BELOW TRIM BOARD
120	FOOD PREP ROOM	N/A	N/A	PNT-1	PNT-1	PNT-1	PNT-1	
1-10	DOG KENNELS	HPC-1	HPC-1	HPC-2	HPC-2	HPC-2	HPC-2	

MATERIAL SCHEDULE

SPEC	TYPE	DESCRIPTION	BASIS OF DESIGN			REMARKS
			MANUFACTURER	MODEL	COLOR	
06 20 00	TRM-1	PVC TRIM BOARD	AZEK		PNT-2	
09 65 00	RB-1	RUBBER BASE	ROPPE	PINNACLE	TBD	
09 09 00	PNT-1	INTERIOR PAINT - WALL	SHERWIN WILLIAMS		TBD	
09 09 00	PNT-2	INTERIOR PAINT - DOOR FRAME/TRIM	SHERWIN WILLIAMS		TBD	
09 96 00	HPC-1	HIGH PERFORMANCE COATING - FLOOR	SANI-TRED	PERMAFLEX	TBD	
09 96 00	HPC-2	HIGH PERFORMANCE COATING - WALL	SANI-TRED	PERMAFLEX	TBD	

GENERAL NOTES

1. ALL DIMENSIONS ARE IN FEET/INCHES, UON.
2. THESE GENERAL NOTES ARE NOT INTENDED TO REPLACE SPECIFICATIONS - REFER TO SPECIFICATION REQUIREMENTS IN ADDITION TO GENERAL NOTES.
3. ROOM AREAS AND PERIMETERS ARE APPROXIMATE AND FOR REFERENCE ONLY - VERIFY QUANTITIES AND DIMENSIONS IN FIELD.
4. DO NOT SCALE DIMENSIONS FROM DRAWINGS - REQUEST NECESSARY DIMENSIONS NOT SHOWN ON THE DRAWINGS FROM THE ARCHITECT.
5. ALL DIMENSIONS ARE TO FOS AND CENTER OF DOORS AND OPENINGS, UON. ALL NON-DIMENSIONED DOOR LOCATIONS SHALL BE OFFSET 4" FROM THE ADJACENT WALL TO THE HINGE SIDE OF THE DOOR OPENING.
6. CONTRACTOR SHALL BE RESPONSIBLE FOR SCHEDULING AND COORDINATING THE WORK OF SUB-CONTRACTORS - THE CONTRACTOR SHALL BE RESPONSIBLE TO COORDINATE WITH THE BUILDING OWNER, TENANT, OR THE DESIGNATED REPRESENTATIVE FOR THE DELIVER AND INSTALLATION OF ITEMS BEING PROVIDED AND INSTALLED BY OTHERS.
7. MECHANICAL, PLUMBING AND ELECTRICAL WORK RELATED TO THE DEMOLITION AND NEW INSTALLATION OF COMPONENTS SHALL COMPLY WITH ALL APPLICABLE CODES.
8. ALL MATERIALS, FABRICATION, AND INSTALLATION SHALL COMPLY WITH THE APPLICABLE REQUIREMENTS AND SPECIFICATIONS FOR EACH DIVISION OF WORK.
9. CONTRACTOR SHALL BE RESPONSIBLE FOR TIMELY ORDERING OF MATERIALS INCLUDED IN THESE CONTRACT DOCUMENTS.
10. CONTRACTOR SHALL CLEAN, PATCH AND REPAIR ALL SURFACES DAMAGED BY DEMOLITION, ALTERATION OR INSTALLATION OF THE WORK.
11. CONTRACTOR SHALL PREPARE ALL WALLS AND PARTITIONS AS REQUIRED BY MANUFACTURERS TO RECEIVE THE SPECIFIED FINISHES.
12. ALL REQUESTS FOR INFORMATION PROMPTED BY THE AUTHORITY HAVING JURISDICTION (AHJ) SHALL INCLUDE A COPY OF AHJ'S COMMENTS AND THE BUILDING INSPECTOR'S FIELD REPORT TO ENSURE AN ACCURATE AND TIMELY RESPONSE.

Michael Baker INTERNATIONAL AECC103
3900 C Street, Suite 900
Anchorage, Alaska 99503
907.273.1600 www.mbakerintl.com

COFFMAN ENGINEERS AECC249
800 E Street
Anchorage, Alaska 99501
907.276.6664 www.coffman.com

STATE OF ALASKA
WILLIAM KONTESS
A-11018
01-11-2017
REGISTERED PROFESSIONAL ENGINEER

CITY OF VALDEZ, ALASKA
OPPORTUNITIES IN EVERY SEASON

VALDEZ ANIMAL SHELTER
KENNEL RENOVATION
VALDEZ, ALASKA

NO.	DATE	REVISION	BY	APVD

CLIENT PROJECT:	16-350-1606
CAD DWG FILE:	A-401.DWG
DRAWN BY:	J. MONROY
CHECKED BY:	P. LANGLEY
PROJECT NUMBER:	167167

COPYRIGHT:
MICHAEL BAKER INTERNATIONAL

SHEET TITLE
ARCHITECTURAL
INTERIOR ELEVATIONS,
ROOM FINISH, AND
MATERIAL SCHEDULES

A-401

SHEET 10 OF 25

IF SHEET IS LESS THAN 22"x34" IT IS A REDUCED PRINT - SCALE ACCORDINGLY

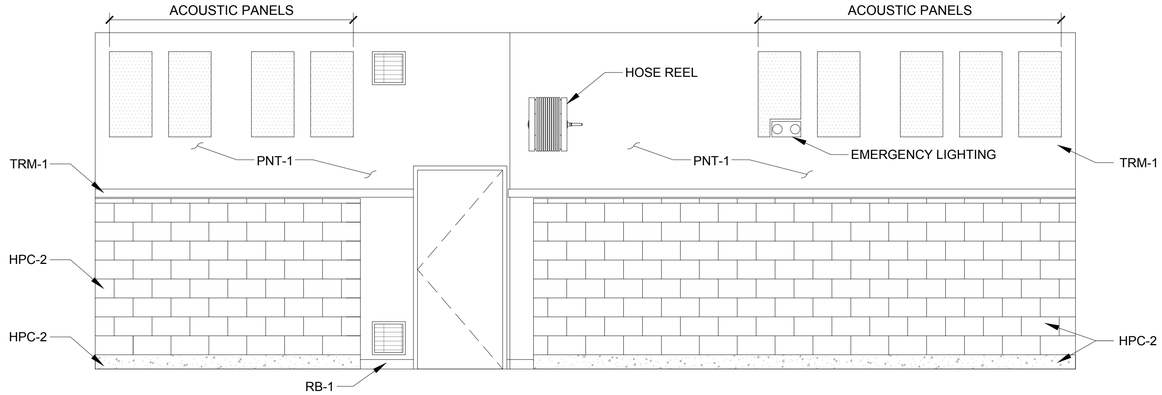

1 KENNEL AREA WEST INTERIOR ELEVATION
3/8" = 1'-0"

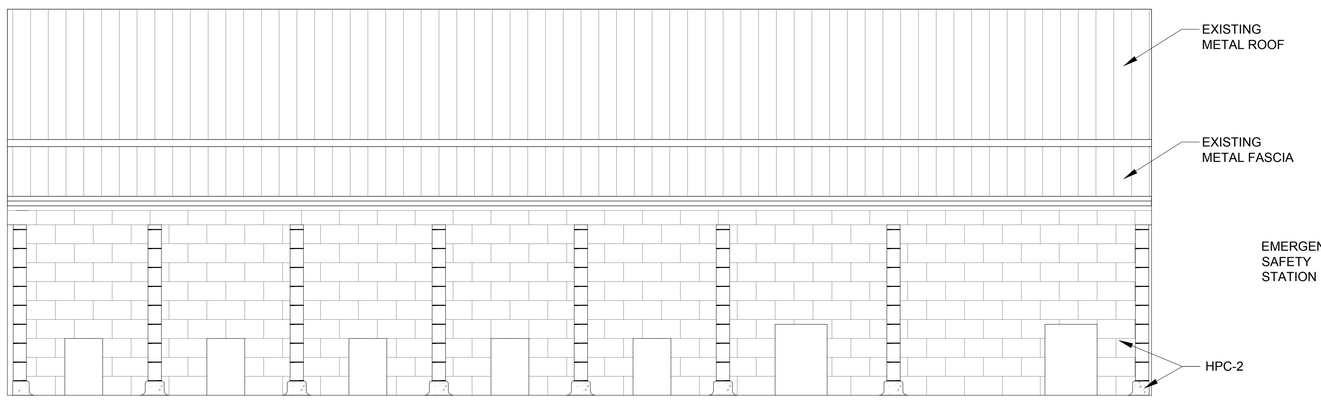

2 EXTERIOR KENNEL AREA - NORTH ELEVATION
3/8" = 1'-0"

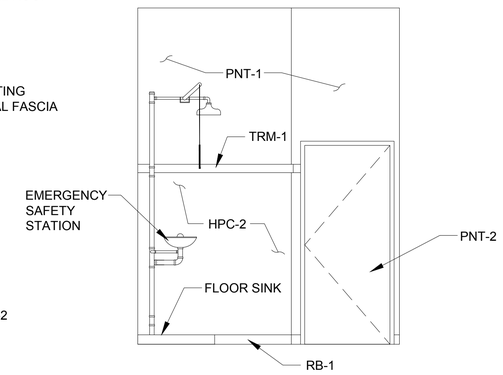

3 GROOMING ROOM
SOUTH INTERIOR ELEVATION
3/8" = 1'-0"

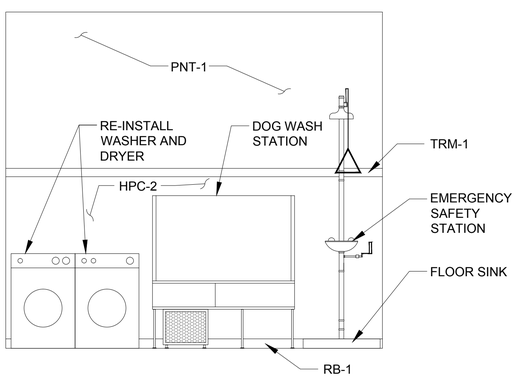

4 GROOMING ROOM
EAST INTERIOR ELEVATION
3/8" = 1'-0"

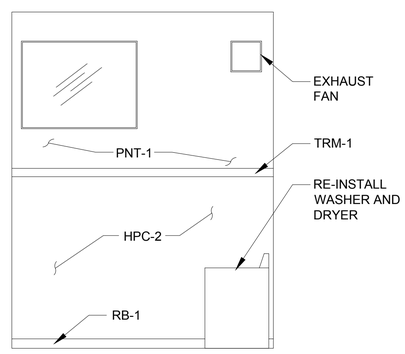

5 GROOMING ROOM
NORTH INTERIOR ELEVATION
3/8" = 1'-0"

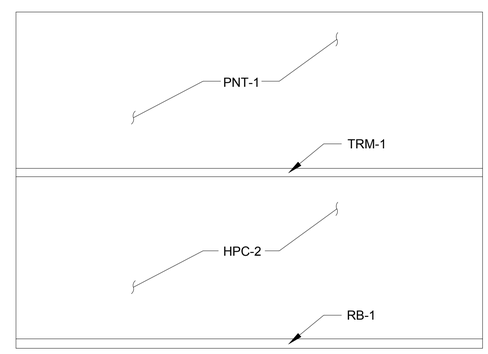

6 GROOMING ROOM
WEST INTERIOR ELEVATION
3/8" = 1'-0"

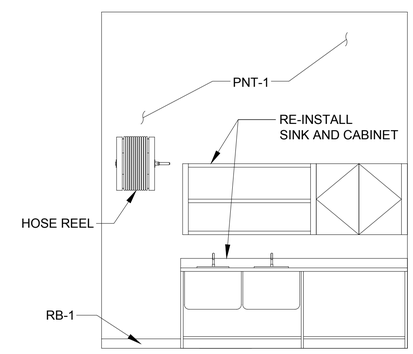

7 FOOD PREP ROOM
WEST INTERIOR ELEVATION
3/8" = 1'-0"

GENERAL NOTES

1. ALL DIMENSIONS ARE IN FEET/INCHES, UON.
2. THESE GENERAL NOTES ARE NOT INTENDED TO REPLACE SPECIFICATIONS - REFER TO SPECIFICATION REQUIREMENTS IN ADDITION TO GENERAL NOTES.
3. ROOM AREAS AND PERIMETERS ARE APPROXIMATE AND FOR REFERENCE ONLY - VERIFY QUANTITIES AND DIMENSIONS IN FIELD.
4. DO NOT SCALE DIMENSIONS FROM DRAWINGS - REQUEST NECESSARY DIMENSIONS NOT SHOWN ON THE DRAWINGS FROM THE ARCHITECT.
5. ALL DIMENSIONS ARE TO FOS AND CENTER OF DOORS AND OPENINGS, UON. ALL NON-DIMENSIONED DOOR LOCATIONS SHALL BE OFFSET 4" FROM THE ADJACENT WALL TO THE HINGE SIDE OF THE DOOR OPENING.
6. CONTRACTOR SHALL BE RESPONSIBLE FOR SCHEDULING AND COORDINATING THE WORK OF SUB-CONTRACTORS - THE CONTRACTOR SHALL BE RESPONSIBLE TO COORDINATE WITH THE BUILDING OWNER, TENANT, OR THE DESIGNATED REPRESENTATIVE FOR THE DELIVER AND INSTALLATION OF ITEMS BEING PROVIDED AND INSTALLED BY OTHERS.
7. MECHANICAL, PLUMBING AND ELECTRICAL WORK RELATED TO THE DEMOLITION AND NEW INSTALLATION OF COMPONENTS SHALL COMPLY WITH ALL APPLICABLE CODES.
8. ALL MATERIALS, FABRICATION, AND INSTALLATION SHALL COMPLY WITH THE APPLICABLE REQUIREMENTS AND SPECIFICATIONS FOR EACH DIVISION OF WORK.
9. CONTRACTOR SHALL BE RESPONSIBLE FOR TIMELY ORDERING OF MATERIALS INCLUDED IN THESE CONTRACT DOCUMENTS.
10. CONTRACTOR SHALL CLEAN, PATCH AND REPAIR ALL SURFACES DAMAGED BY DEMOLITION, ALTERATION OR INSTALLATION OF THE WORK.
11. CONTRACTOR SHALL PREPARE ALL WALLS AND PARTITIONS AS REQUIRED BY MANUFACTURERS TO RECEIVE THE SPECIFIED FINISHES.
12. ALL REQUESTS FOR INFORMATION PROMPTED BY THE AUTHORITY HAVING JURISDICTION (AHJ) SHALL INCLUDE A COPY OF AHJ'S COMMENTS AND THE BUILDING INSPECTOR'S FIELD REPORT TO ENSURE AN ACCURATE AND TIMELY RESPONSE.

Michael Baker INTERNATIONAL AECC103
3900 C Street, Suite 900
Anchorage, Alaska 99503
907.273.1600 www.mbakerintl.com

COFFMAN ENGINEERS AECC249
800 E Street
Anchorage, Alaska 99501
907.276.6664 www.coffman.com

STATE OF ALASKA
WILLIAM KONTESS
A-11018
REGISTERED PROFESSIONAL ENGINEER

CITY OF VALDEZ, ALASKA
OPPORTUNITIES IN EVERY SEASON

VALDEZ ANIMAL SHELTER
KENNEL RENOVATION
VALDEZ, ALASKA

NO.	DATE	REVISION	BY	APV'D

CLIENT PROJECT:	16-350-1606
CAD DWG FILE:	A-402.DWG
DRAWN BY:	J. MONROY
CHECKED BY:	P. LANGLEY
PROJECT NUMBER:	167167

COPYRIGHT:
MICHAEL BAKER INTERNATIONAL

SHEET TITLE
ARCHITECTURAL
INTERIOR AND EXTERIOR
ELEVATIONS

A-402

IF SHEET IS LESS THAN 22"x34" IT IS A REDUCED PRINT - SCALE ACCORDINGLY

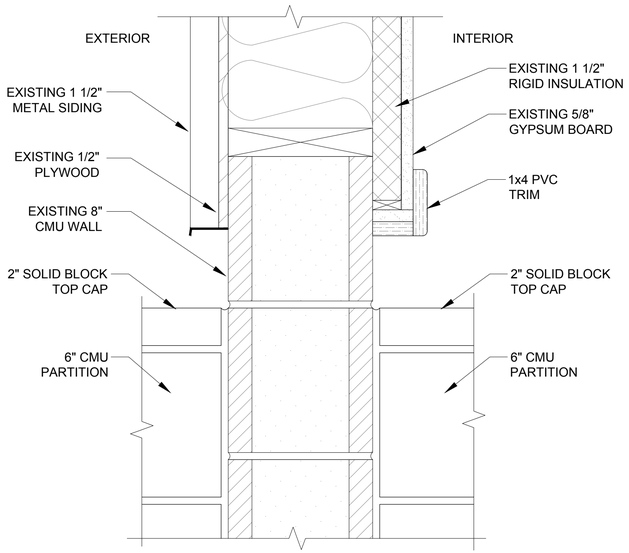

1 DETAIL AT EXTERIOR EXISTING 8" CMU WALL
3" = 1'-0"

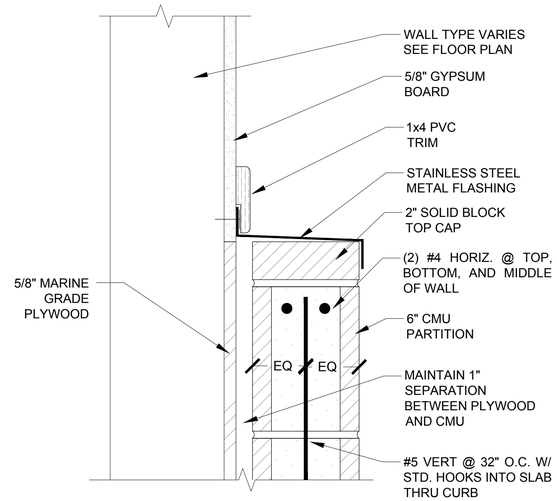

2 DETAIL AT INTERIOR WALL AND CMU KENNEL PARTITION
3" = 1'-0"

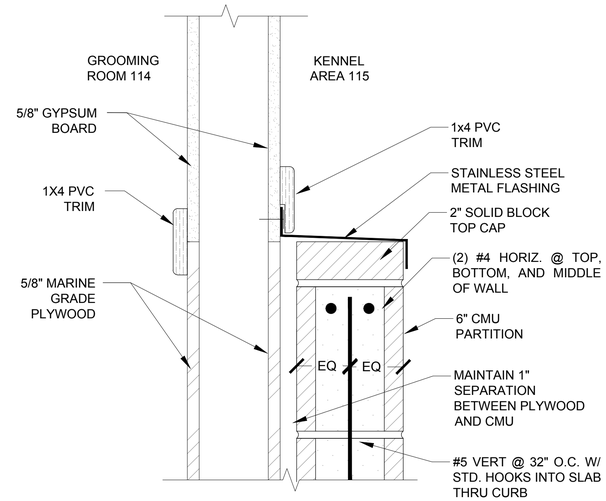

3 DETAIL AT GROOMING ROOM WALL AND CMU KENNEL PARTITION
3" = 1'-0"

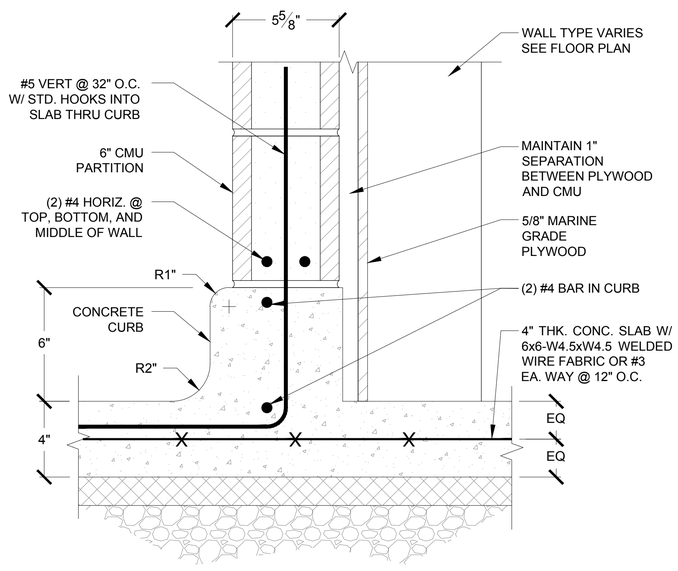

4 DETAIL AT BASE OF INTERIOR WALL AND CMU KENNEL PARTITION
3" = 1'-0"

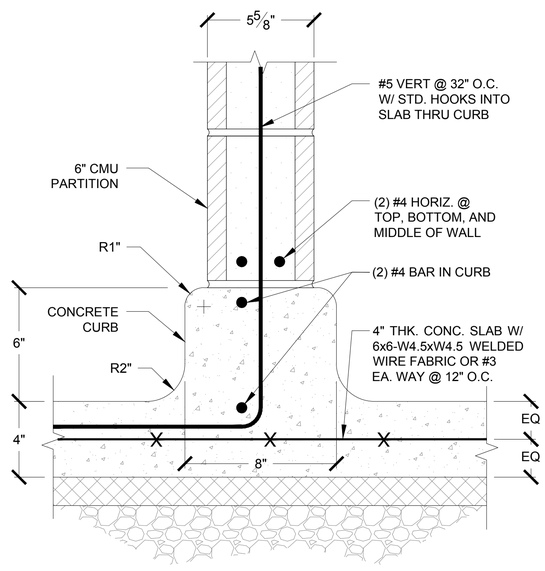

5 DETAIL AT BASE OF CMU KENNEL PARTITION
3" = 1'-0"

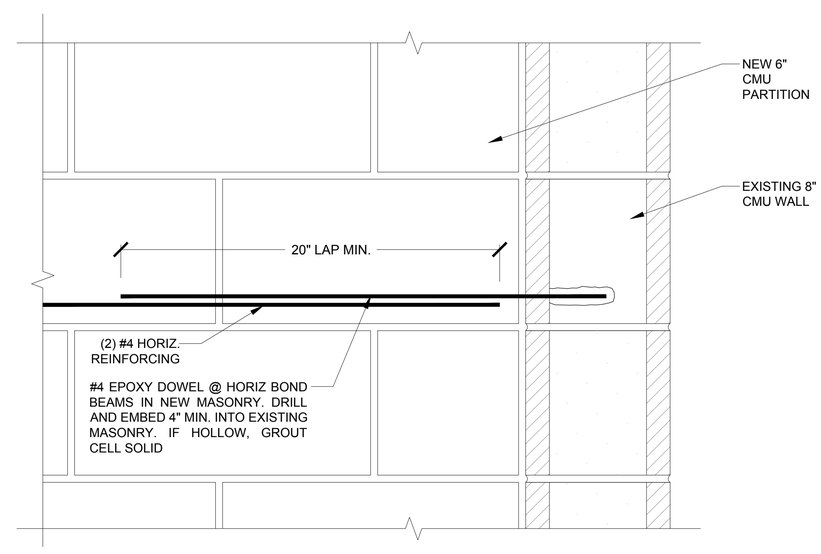

6 NEW TO EXISTING MASONRY CMU KENNEL PARTITION
3" = 1'-0"

GENERAL NOTES

1. ALL DIMENSIONS ARE IN FEET/INCHES, UON.
2. THESE GENERAL NOTES ARE NOT INTENDED TO REPLACE SPECIFICATIONS - REFER TO SPECIFICATION REQUIREMENTS IN ADDITION TO GENERAL NOTES.
3. ROOM AREAS AND PERIMETERS ARE APPROXIMATE AND FOR REFERENCE ONLY - VERIFY QUANTITIES AND DIMENSIONS IN FIELD.
4. DO NOT SCALE DIMENSIONS FROM DRAWINGS - REQUEST NECESSARY DIMENSIONS NOT SHOWN ON THE DRAWINGS FROM THE ARCHITECT.
5. ALL DIMENSIONS ARE TO FOS AND CENTER OF DOORS AND OPENINGS, UON. ALL NON-DIMENSIONED DOOR LOCATIONS SHALL BE OFFSET 4" FROM THE ADJACENT WALL TO THE HINGE SIDE OF THE DOOR OPENING.
6. CONTRACTOR SHALL BE RESPONSIBLE FOR SCHEDULING AND COORDINATING THE WORK OF SUB-CONTRACTORS - THE CONTRACTOR SHALL BE RESPONSIBLE TO COORDINATE WITH THE BUILDING OWNER, TENANT, OR THE DESIGNATED REPRESENTATIVE FOR THE DELIVER AND INSTALLATION OF ITEMS BEING PROVIDED AND INSTALLED BY OTHERS.
7. MECHANICAL, PLUMBING AND ELECTRICAL WORK RELATED TO THE DEMOLITION AND NEW INSTALLATION OF COMPONENTS SHALL COMPLY WITH ALL APPLICABLE CODES.
8. ALL MATERIALS, FABRICATION, AND INSTALLATION SHALL COMPLY WITH THE APPLICABLE REQUIREMENTS AND SPECIFICATIONS FOR EACH DIVISION OF WORK.
9. CONTRACTOR SHALL BE RESPONSIBLE FOR TIMELY ORDERING OF MATERIALS INCLUDED IN THESE CONTRACT DOCUMENTS.
10. CONTRACTOR SHALL CLEAN, PATCH AND REPAIR ALL SURFACES DAMAGED BY DEMOLITION, ALTERATION OR INSTALLATION OF THE WORK.
11. CONTRACTOR SHALL PREPARE ALL WALLS AND PARTITIONS AS REQUIRED BY MANUFACTURERS TO RECEIVE THE SPECIFIED FINISHES.
12. ALL REQUESTS FOR INFORMATION PROMPTED BY THE AUTHORITY HAVING JURISDICTION (AHJ) SHALL INCLUDE A COPY OF AHJ'S COMMENTS AND THE BUILDING INSPECTOR'S FIELD REPORT TO ENSURE AN ACCURATE AND TIMELY RESPONSE.

STRUCTURAL NOTES

1. SEE DRAWING A-302 FOR STRUCTURAL NOTES.

Michael Baker INTERNATIONAL AECC103
3900 C Street, Suite 900
Anchorage, Alaska 99503
907.273.1600 www.mbakerintl.com

COFFMAN ENGINEERS AECC249
800 E Street
Anchorage, Alaska 99501
907.276.6664 www.coffman.com

STATE OF ALASKA 49TH WILLIAM KONTESS A-11018 REGISTERED PROFESSIONAL ENGINEER

CITY OF VALDEZ, ALASKA • OPPORTUNITIES IN EVERY SEASON •

VALDEZ ANIMAL SHELTER
KENNEL RENOVATION
VALDEZ, ALASKA

NO.	DATE	REVISION	BY	APVD

CLIENT PROJECT:	16-350-1606
CAD DWG FILE:	A-501.DWG
DRAWN BY:	J. MONROY
CHECKED BY:	P. LANGLEY
PROJECT NUMBER:	167716

COPYRIGHT:
MICHAEL BAKER INTERNATIONAL

STATE OF ALASKA 49TH DAVIN DAVID FITZSIMMONS No. SE101517 REGISTERED PROFESSIONAL ENGINEER
1/8/19
STRUCTURAL ONLY

SHEET TITLE
ARCHITECTURAL
INTERIOR AND EXTERIOR
WALL DETAILS

A-501

SHEET 12 OF 25

IF SHEET IS LESS THAN 22"x34" IT IS A REDUCED PRINT - SCALE ACCORDINGLY

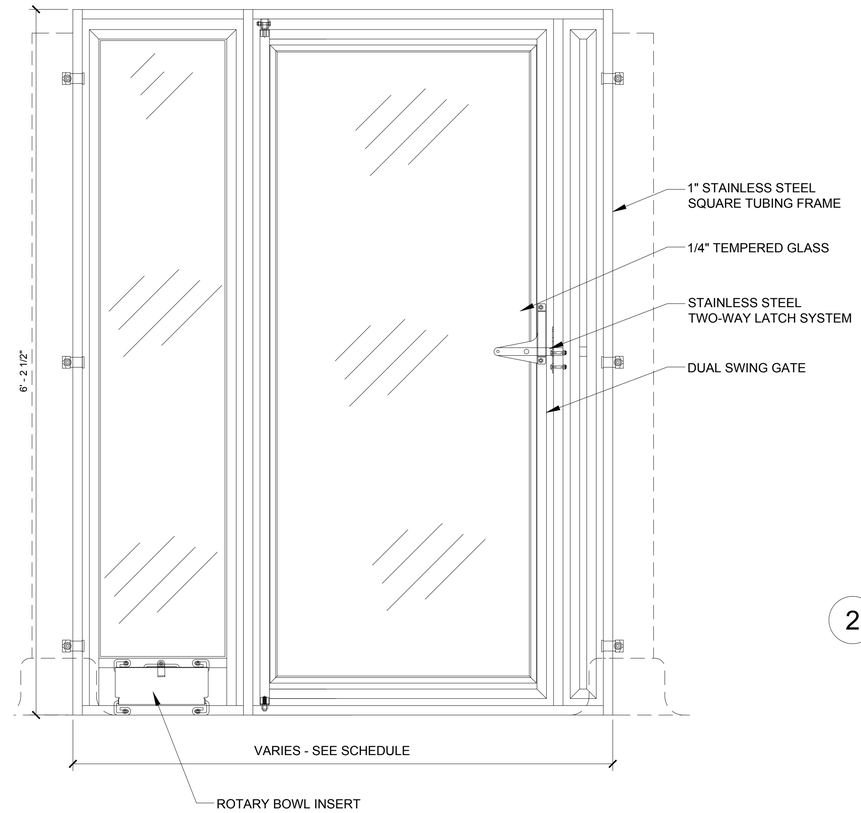

1 KENNEL STALL FRONT - ELEVATION
1-1/2" = 1'-0"

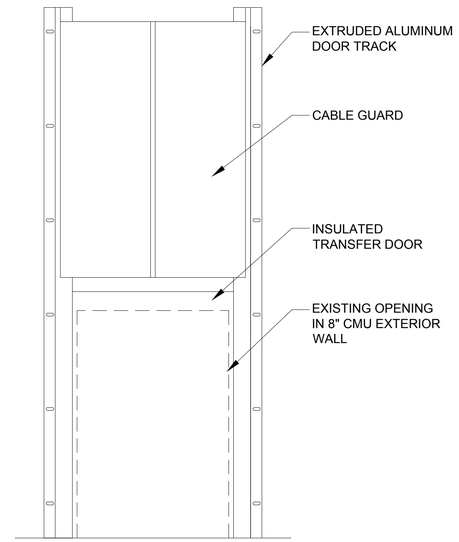

2 KENNEL TRANSFER DOOR ELEVATION
1-1/2" = 1'-0"

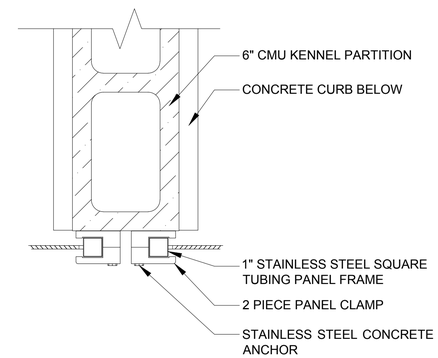

5 STALL FRONT MOUNTING DETAIL
3" = 1'-0"

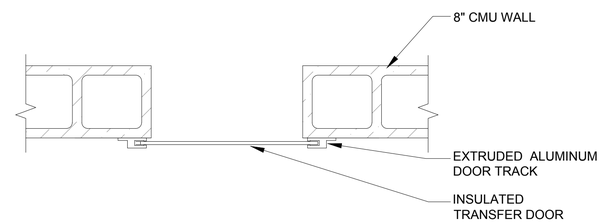

4 KENNEL TRANSFER DOOR - PLAN
1-1/2" = 1'-0"

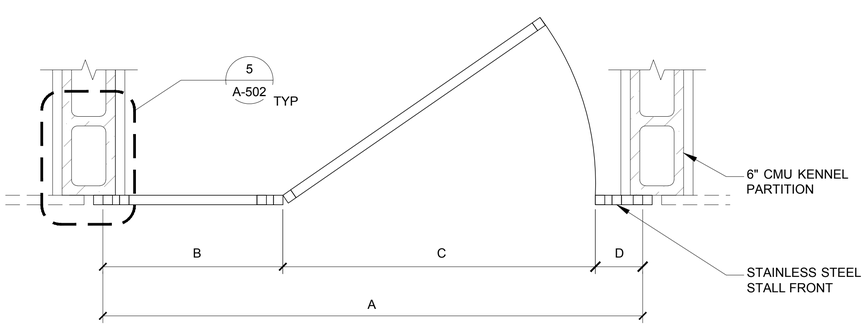

3 KENNEL STALL FRONT - PLAN
1-1/2" = 1'-0"

KENNEL STALL FRONT - SCHEDULE

KENNEL NUMBER	STALL FRONT DIMENSIONS				
	A	B	C	D	REMARKS
1	4'-6"	1'-4"	2'-9"	0'-5"	
2	4'-9"	1'-7"	2'-9"	0'-5"	
3	4'-9"	1'-7"	2'-9"	0'-5"	
4	4'-9"	1'-7"	2'-9"	0'-5"	
5	4'-9"	1'-7"	2'-9"	0'-5"	
6	5'-9"	2'-7"	2'-9"	0'-5"	
7	8'-6"	5'-4"	2'-9"	0'-5"	
8	4'-10"	1'-8"	2'-9"	0'-5"	
9	4'-5"	1'-3"	2'-9"	0'-5"	
10	4'-5"	1'-3"	2'-9"	0'-5"	
11	4'-5"	1'-3"	2'-9"	0'-5"	
12	4'-5"	1'-3"	2'-9"	0'-5"	
13	4'-5"	1'-3"	2'-9"	0'-5"	
14	4'-5"	1'-3"	2'-9"	0'-5"	

NOTE: SEE DRAWING A-101 FOR KENNEL LOCATIONS.

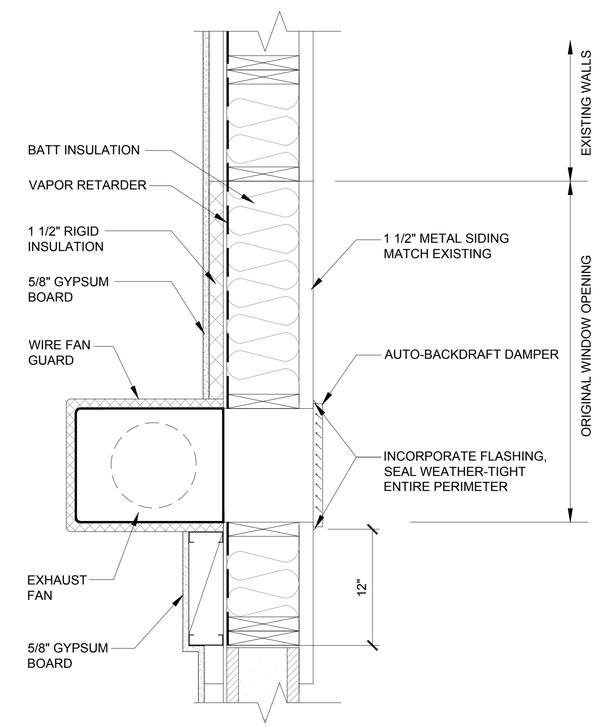

6 EXHAUST FAN DETAIL
1-1/2" = 1'-0"

NOTE: SEE MECHANICAL DRAWINGS M-100 AND M-500 FOR DETAILS.

GENERAL NOTES

1. ALL DIMENSIONS ARE IN FEET/INCHES, UON.
2. THESE GENERAL NOTES ARE NOT INTENDED TO REPLACE SPECIFICATIONS - REFER TO SPECIFICATION REQUIREMENTS IN ADDITION TO GENERAL NOTES.
3. ROOM AREAS AND PERIMETERS ARE APPROXIMATE AND FOR REFERENCE ONLY - VERIFY QUANTITIES AND DIMENSIONS IN FIELD.
4. DO NOT SCALE DIMENSIONS FROM DRAWINGS - REQUEST NECESSARY DIMENSIONS NOT SHOWN ON THE DRAWINGS FROM THE ARCHITECT.
5. ALL DIMENSIONS ARE TO FOS AND CENTER OF DOORS AND OPENINGS, UON. ALL NON-DIMENSIONED DOOR LOCATIONS SHALL BE OFFSET 4" FROM THE ADJACENT WALL TO THE HINGE SIDE OF THE DOOR OPENING.
6. CONTRACTOR SHALL BE RESPONSIBLE FOR SCHEDULING AND COORDINATING THE WORK OF SUB-CONTRACTORS - THE CONTRACTOR SHALL BE RESPONSIBLE TO COORDINATE WITH THE BUILDING OWNER, TENANT, OR THE DESIGNATED REPRESENTATIVE FOR THE DELIVER AND INSTALLATION OF ITEMS BEING PROVIDED AND INSTALLED BY OTHERS.
7. MECHANICAL, PLUMBING AND ELECTRICAL WORK RELATED TO THE DEMOLITION AND NEW INSTALLATION OF COMPONENTS SHALL COMPLY WITH ALL APPLICABLE CODES.
8. ALL MATERIALS, FABRICATION, AND INSTALLATION SHALL COMPLY WITH THE APPLICABLE REQUIREMENTS AND SPECIFICATIONS FOR EACH DIVISION OF WORK.
9. CONTRACTOR SHALL BE RESPONSIBLE FOR TIMELY ORDERING OF MATERIALS INCLUDED IN THESE CONTRACT DOCUMENTS.
10. CONTRACTOR SHALL CLEAN, PATCH AND REPAIR ALL SURFACES DAMAGED BY DEMOLITION, ALTERATION OR INSTALLATION OF THE WORK.
11. CONTRACTOR SHALL PREPARE ALL WALLS AND PARTITIONS AS REQUIRED BY MANUFACTURERS TO RECEIVE THE SPECIFIED FINISHES.
12. ALL REQUESTS FOR INFORMATION PROMPTED BY THE AUTHORITY HAVING JURISDICTION (AHJ) SHALL INCLUDE A COPY OF AHJ'S COMMENTS AND THE BUILDING INSPECTOR'S FIELD REPORT TO ENSURE AN ACCURATE AND TIMELY RESPONSE.

Michael Baker INTERNATIONAL AECC103
3900 C Street, Suite 900
Anchorage, Alaska 99503
907.273.1600 www.mbakerintl.com

COFFMAN ENGINEERS AECC249
800 E Street
Anchorage, Alaska 99501
907.276.6664 www.coffman.com

STATE OF ALASKA
WILLIAM KONTESS
A-11018
REGISTERED PROFESSIONAL ENGINEER

CITY OF VALDEZ, ALASKA
OPPORTUNITIES IN EVERY SEASON

VALDEZ ANIMAL SHELTER
KENNEL RENOVATION
VALDEZ, ALASKA

NO.	DATE	REVISION	BY	APVD

CLIENT PROJECT:	16-350-1606
CAD DWG FILE:	A-502.DWG
DRAWN BY:	J. MONROY
CHECKED BY:	P. LANGLEY
PROJECT NUMBER:	167716

COPYRIGHT:
MICHAEL BAKER INTERNATIONAL

SHEET TITLE
ARCHITECTURAL
KENNEL STALLS,
TRANSFER DOOR,
SCHEDULE AND
DETAILS

A-502

IF SHEET IS LESS THAN 22"x34" IT IS A REDUCED PRINT - SCALE ACCORDINGLY

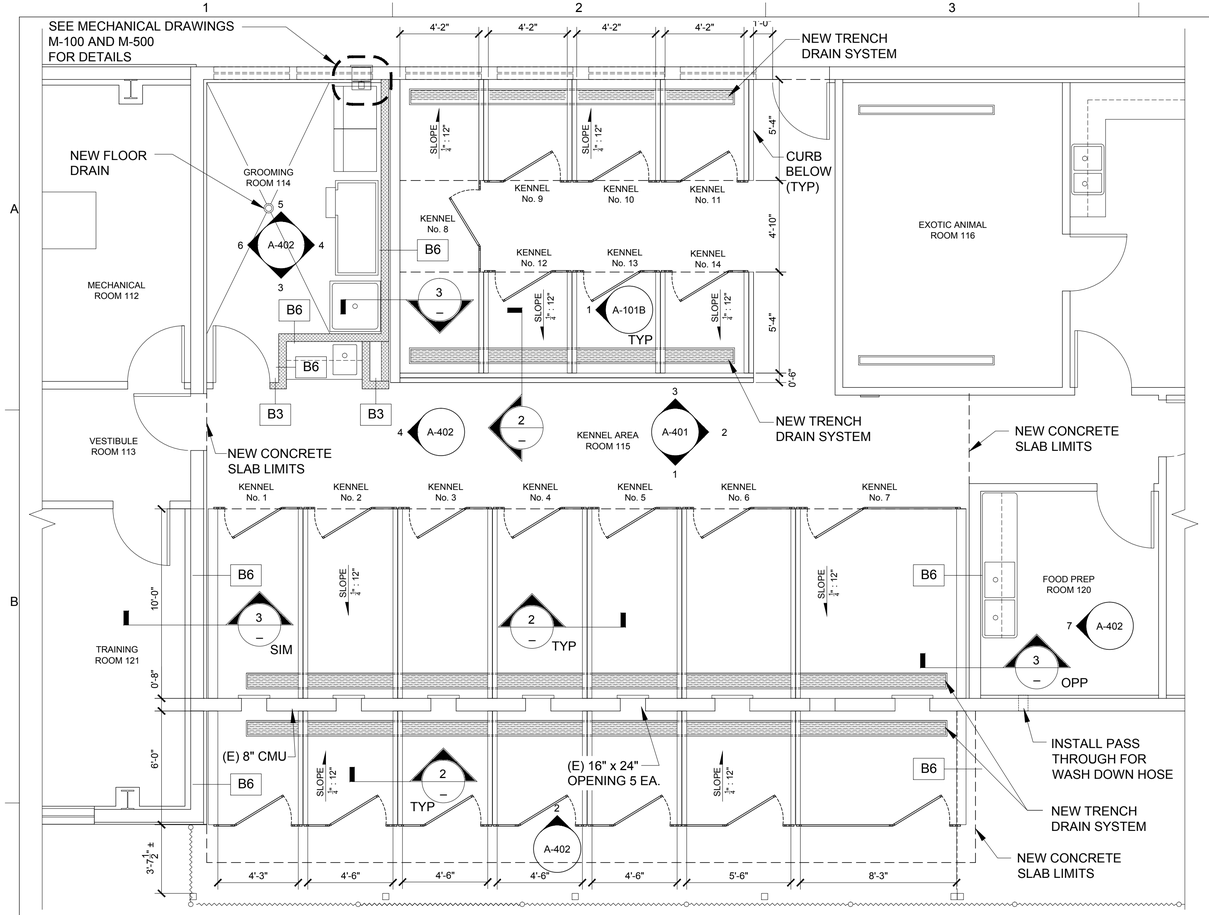

KENNEL FLOOR PLAN - BID ALTERNATE 1

1/4" = 1'-0"

SHEET NOTES

1. BID ALTERNATIVE 1 SUBSTITUTES PILE-FABRICATED KENNEL PANELS IN LIEU OF CMU PARTITIONS TO SEPARATE KENNELS.
2. SEE PLANS AND DETAILS THIS SHEET AND REFER TO SPECIFICATIONS FOR PRODUCT INFORMATION.

GENERAL NOTES

1. ALL DIMENSIONS ARE IN FEET/INCHES, UON.
2. THESE GENERAL NOTES ARE NOT INTENDED TO REPLACE SPECIFICATIONS - REFER TO SPECIFICATION REQUIREMENTS IN ADDITION TO GENERAL NOTES.
3. ROOM AREAS AND PERIMETERS ARE APPROXIMATE AND FOR REFERENCE ONLY - VERIFY QUANTITIES AND DIMENSIONS IN FIELD.
4. DO NOT SCALE DIMENSIONS FROM DRAWINGS - REQUEST NECESSARY DIMENSIONS NOT SHOWN ON THE DRAWINGS FROM THE ARCHITECT.
5. ALL DIMENSIONS ARE TO FOS AND CENTER OF DOORS AND OPENINGS, UON. ALL NON-DIMENSIONED DOOR LOCATIONS SHALL BE OFFSET 4" FROM THE ADJACENT WALL TO THE HINGE SIDE OF THE DOOR OPENING.
6. CONTRACTOR SHALL BE RESPONSIBLE FOR SCHEDULING AND COORDINATING THE WORK OF SUB-CONTRACTORS - THE CONTRACTOR SHALL BE RESPONSIBLE TO COORDINATE WITH THE BUILDING OWNER, TENANT, OR THE DESIGNATED REPRESENTATIVE FOR THE DELIVER AND INSTALLATION OF ITEMS BEING PROVIDED AND INSTALLED BY OTHERS.
7. MECHANICAL, PLUMBING AND ELECTRICAL WORK RELATED TO THE DEMOLITION AND NEW INSTALLATION OF COMPONENTS SHALL COMPLY WITH ALL APPLICABLE CODES.
8. ALL MATERIALS, FABRICATION, AND INSTALLATION SHALL COMPLY WITH THE APPLICABLE REQUIREMENTS AND SPECIFICATIONS FOR EACH DIVISION OF WORK.
9. CONTRACTOR SHALL BE RESPONSIBLE FOR TIMELY ORDERING OF MATERIALS INCLUDED IN THESE CONTRACT DOCUMENTS.
10. CONTRACTOR SHALL CLEAN, PATCH AND REPAIR ALL SURFACES DAMAGED BY DEMOLITION, ALTERATION OR INSTALLATION OF THE WORK.
11. CONTRACTOR SHALL PREPARE ALL WALLS AND PARTITIONS AS REQUIRED BY MANUFACTURERS TO RECEIVE THE SPECIFIED FINISHES.
12. ALL REQUESTS FOR INFORMATION PROMPTED BY THE AUTHORITY HAVING JURISDICTION (AHJ) SHALL INCLUDE A COPY OF AHJ'S COMMENTS AND THE BUILDING INSPECTOR'S FIELD REPORT TO ENSURE AN ACCURATE AND TIMELY RESPONSE.

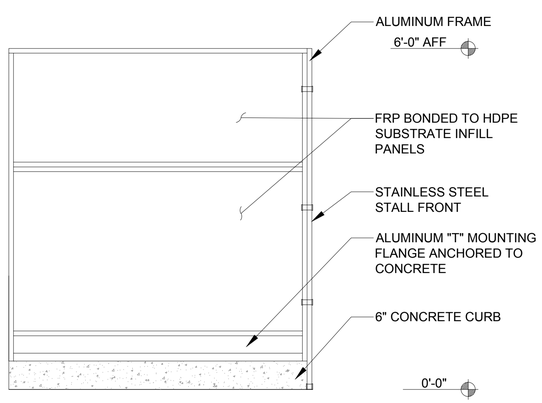

1 ISOLATION PANEL - ELEVATION BID ALTERNATE 1

3/4" = 1'-0"

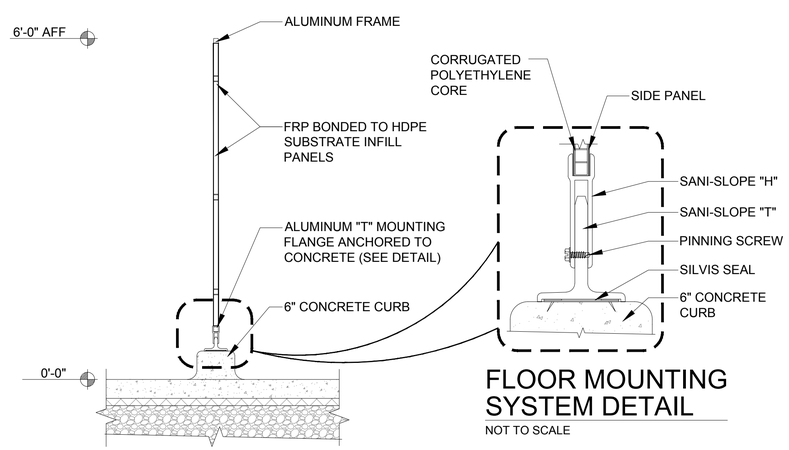

2 ISOLATION PANEL - SECTION BID ALTERNATE 1

3/4" = 1'-0"

FLOOR MOUNTING SYSTEM DETAIL

NOT TO SCALE

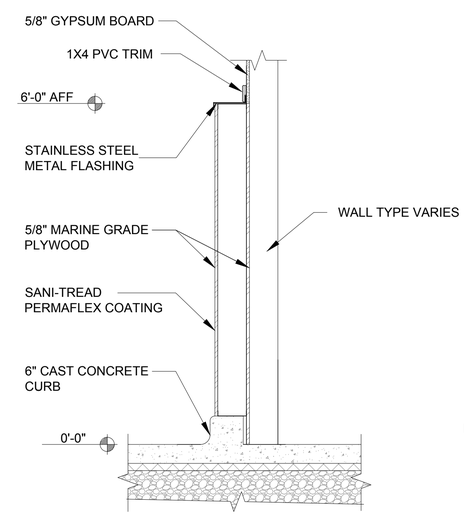

3 END WALL - SECTION BID ALTERNATE 1

3/4" = 1'-0"

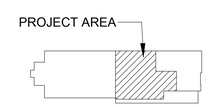

KEY PLAN

NOT TO SCALE

Michael Baker INTERNATIONAL AECC103
3900 C Street, Suite 900
Anchorage, Alaska 99503
907.273.1600 www.mbakerintl.com

COFFMAN ENGINEERS AECC249
800 E Street
Anchorage, Alaska 99501
907.276.6664 www.coffman.com

STATE OF ALASKA — WILLIAM KONTESS — A-11018 — 9-11-25 — REGISTERED PROFESSIONAL ENGINEER

CITY OF VALDEZ, ALASKA — OPPORTUNITIES IN EVERY SEASON

VALDEZ ANIMAL SHELTER
KENNEL RENOVATION
VALDEZ, ALASKA

NO.	DATE	REVISION	BY	APVD

CLIENT PROJECT: 16-350-1606
CAD DWG FILE: A-101_ALT1.DWG
DRAWN BY: J. MONROY
CHECKED BY: P. LANGLEY
PROJECT NUMBER: 167167
COPYRIGHT: MICHAEL BAKER INTERNATIONAL

SHEET TITLE
ARCHITECTURAL
KENNEL FLOOR PLAN
NEW LAYOUT
ALTERNATE 1

A-101B

IF SHEET IS LESS THAN 22"x34" IT IS A REDUCED PRINT - SCALE ACCORDINGLY

HVAC FITTINGS & SYMBOLS

BRANCH DUCT TAKEOFFS

W/ MINIMUM PRESSURE DROP

ROUND OR RECTANGULAR — 45°

RECTANGULAR DUCT

CONICAL SPIN-IN ROUND DUCT RUNOUT TO SINGLE DIFFUSER OR GRILLE ONLY

OK ONLY UNDER 1,500 FPM

R=1/2W DUCTS W/ AIR VELOCITY UNDER 1,500 FPM
R=W DUCTS W/ AIR VELOCITY OVER 1,500 FPM AND ALL DUCTS UPSTREAM OF TERMINAL UNITS

W

D — 45° — W

D= 1/2W, BUT NOT MORE THAN 12" (1/3W OK IF UNDER 3,000 FPM)

CHANGE OF DUCT SIZE

RECTANGULAR TO ROUND TRANSITION

TRANSITION

MAX. 15° DUCTS W/ AIR VELOCITY OVER 1500 FPM. MAX 30° DUCTS W/ AIR VELOCITY UNDER 1500 FPM

OFFSETS

OFFSETS (TO AVOID OBSTRUCTIONS) ARE REQUIRED BUT ARE NOT NECESSARILY SHOWN ON THE PLANS.

45° OR 90° RADIUS ELBOWS

MAX. 15° DUCTS W/ AIR VELOCITY OVER 1500 FPM. MAX 30° DUCTS W/ AIR VELOCITY UNDER 1500 FPM

TURNING VANES

ACCESS PANEL (TYPICAL) REQUIRED FOR RETURN & EXHAUST DUCTS

OBTAIN PRIOR APPROVAL FOR ALL RETURN & EXHAUST LOCATIONS

R=1/2W DUCTS W/ AIR VELOCITY UNDER 1,500 FPM
R=W DUCTS W/ AIR VELOCITY OVER 1,500 FPM AND ALL DUCTS UPSTREAM OF TERMINAL UNITS

W

12"x12" ACCESS PANEL ON BOTTOM OF DUCT UPSTREAM OF TURNING VANES. REQUIRED FOR RETURN AND EXHAUST DUCTS

TURNING VANES

OTHER HVAC SYMBOLS

- AIR FLOW OUT
- AIR FLOW OUT
- THERMOSTAT
- HUMIDISTAT
- SENSORS
- DIFFUSER OR GRILLE TAGS
- SUPPLY AIR (S/A) TERMINAL
- RETURN AIR (R/A) TERMINAL
- EXHAUST AIR (E/A) TERMINAL
- LINEAR SLOT DIFFUSER
- FLEXIBLE DUCT
- UNIT HEATER

#	FT
MBH	GPM

BASEBOARD IDENTIFICATION

VAV-# — VAV IDENTIFICATION

FINTUBE

SINGLE	DOUBLE	
18x12	18x12	DUCT SIZE IN INCHES FIRST SIZE LISTED IS SIDE SHOWN
		INSULATED DUCT
		ACOUSTIC LINED DUCT
R	R	DUCT RISE IN DIRECTION OF ARROW
R	R	DUCT DROP IN DIRECTION OF ARROW
18Ø	18Ø	ROUND DUCT IN INCHES
14x12 14x10	8x8 8x6	CHANGE IN DUCT SIZE
		VOLUME DAMPER
		FIRE DAMPER
		SMOKE DAMPER
		FIRE/SMOKE DAMPER
M	M	MOTORIZED DAMPER
		SIDEWALL OR DUCT MOUNTED GRILLE
		ELBOW WITH TURNING VANES
		SUPPLY DUCT TURNED UP
		SUPPLY DUCT TURNED DOWN
		RETURN/EXHAUST DUCT TURNED UP
		RETURN/EXHAUST DUCT TURNED DOWN
		ROUND DUCT TURNED UP
		ROUND DUCT TURNED DOWN
		ROUND DUCT IN SECTION
		SUPPLY (S/A) DUCT IN SECTION
		RETURN (R/A) DUCT IN SECTION
		EXHAUST (E/A) DUCT IN SECTION
S	S	SEISMIC DUCT JOINT

PIPING SYMBOLS

- GATE VALVE
- NEEDLE VALVE
- BALL VALVE
- GLOBE VALVE
- PLUG VALVE
- STOP COCK
- OS & Y GATE VALVE
- AUTOMATIC CONTROL VALVE (PNEUMATIC)
- 3-WAY AUTO. CONTROL VALVE (PNEUMATIC)
- MOTORIZED (M) OR SOLENOID (S) VALVE
- THREE WAY MOTORIZED OR SOLENOID VALVE
- BUTTERFLY VALVE
- FUSIBLE OIL SAFETY VALVE
- CHECK VALVE
- SPRING CHECK VALVE
- BACKFLOW PREVENTER
- BALANCING VALVE
- BALANCING VALVE (AUTOMATIC)
- PRESSURE REDUCING VALVE
- PRESSURE REGULATOR
- PRESSURE RELIEF VALVE
- SPECIAL VALVE
- FUEL OIL STRAINER
- FUEL ANTI-SIPHON VALVE
- BASKET STRAINER
- STRAINER
- STRAINER WITH BLOW DOWN
- HOSE BIBB
- HOSE THREAD DRAIN VALVE (1)
- HOSE THREAD BALL DRAIN VALVE (1)

(1) INDICATES TO PROVIDE W/END CAP

- HOSE QUICK DISCONNECT
- BLIND FLANGE
- FLANGES
- FIRE DEPT. CONNECTION
- UNION
- REDUCER, CONCENTRIC
- REDUCER, ECCENTRIC
- PT PLUG
- THERMOWELL
- THERMOMETER (LIQUID IN GLASS)
- DIAL THERMOMETER
- PRESSURE GAUGE W/ COCK
- PRESSURE GAUGE W/ COCK & SIPHON
- AIR VENT — C-COIN, M-MANUAL, A-AUTOMATIC, H-HIGH VOLUME
- PIPE SLOPE DIRECTION DOWN (2%)
- FLOW DIRECTION
- EXPANSION LOOP
- EXPANSION JOINT
- EXPANSION GUIDE
- ANCHOR
- FLEX COUPLING
- PUMP (ARROWHEAD INDICATES PUMP DIRECTION)
- WALL CLEANOUT/BLIND FLANGE
- FLOOR CLEANOUT
- YARD CLEANOUT
- FLOOR SINK
- FLOOR DRAIN
- OVERFLOW DRAIN
- ROOF DRAIN
- WATER HAMMER ARRESTOR (PLAN)
- WATER HAMMER ARRESTOR (ELEV.)
- LINE CONNECTING TO EXISTING
- EMERGENCY EYEWASH/SHOWER
- EMERGENCY EYEWASH
- SHOWER
- COLD WATER, CW
- 140° HOT WATER, HW
- 140° HOT WATER CIRCULATION, HWC
- TW — TEMPER WATER
- VENT, V
- TP — TRAP PRIMER LINE
- W — WASTE
- BGW — BELOW GRADE WASTE
- PW — PUMPED WASTE
- PC — PUMPED CONDENSATE
- RL — RAIN LEADER
- ORL — OVERFLOW RAIN LEADER
- RO — REVERSE OSMOSIS
- SD — STORM DRAIN
- AV — ACID VENT
- AW — ACID WASTE
- A — COMPRESSED/SHOP AIR
- F — FIRE PROTECTION MAIN
- FOS — FUEL OIL SUPPLY
- FOR — FUEL OIL RETURN
- G — NATURAL GAS
- MPG — MEDIUM PRESSURE GAS
- HGR — HEATING GLYCOL RETURN
- HGS — HEATING GLYCOL SUPPLY
- HWR — HEATING WATER RETURN
- HWS — HEATING WATER SUPPLY
- CWR — CHILLED WATER RETURN
- CWS — CHILLED WATER SUPPLY
- LPC — LOW PRESSURE CONDENSATE RETURN
- LPS — LOW PRESSURE STEAM (<15 PSI)
- MPC — MEDIUM PRESSURE CONDENSATE RETURN
- MPS — MEDIUM PRESSURE STEAM (15-100 PSI)
- HPC — HIGH PRESSURE CONDENSATE RETURN
- HPS — HIGH PRESSURE STEAM (>100 PSI)
- RGS — RADIANT GLYCOL SUPPLY
- RGR — RADIANT GLYCOL RETURN

GENERAL

NOTES:

SPECIFIC NOTE FOR THIS SHEET ONLY

1. NOTE APPLIES TO ENTIRE SHEET

XX-X - UNDERLINED DESIGNATOR HAS SCHEDULED VALUES, SEE MECHANICAL SCHEDULES

PIPE & DUCT SIZES:
INCH MARKS (") ARE NOT USED WHEN INDICATING PIPE AND DUCT SIZES ON PLANS, DETAILS, OR DIAGRAMS, EXCEPT FOR THE NUMBERAL 1.

LINETYPES:

- EXISTING (THIN LINE)
- NEW (BOLD LINE)
- OR — EXISTING TO BE DEMOLISHED
- CONNECT TO EXISTING
- (E) - EXISTING
- (N) - NEW

ABBREVIATIONS

A	COMPRESSED AIR
AAV	AUTOMATIC AIR VENT
ACM	ASBESTOS CONTAINING MATERIALS
AF	AIR FLOW SWITCH
AFF	ABOVE FINISH FLOOR
AHU	AIR HANDLING UNIT
ASME	AMERICAN SOCIETY OF MECHANICAL ENGINEERS
AW	ACID WASTE
AWT	AVERAGE WATER TEMPERATURE
BA	BREATHING AIR
BB	BASEBOARD
BF	BYPASS FEEDER
BTU	BRITISH THERMAL UNIT
BV	BALANCING VALVE
CA	MEDICAL COMPRESSED AIR
CC	COOLING COIL
CFM	CUBIC FEET PER MINUTE
CLG	CEILING
CMU	CONCRETE MASONRY UNIT
CONC	CONCRETE
CO	CLEANOUT
CUH	CABINET UNIT HEATER
CW	COLD WATER
DB	DRY BULB
Ø	DIAMETER OR PHASE
DEMO	DEMOLISH
DN	DOWN
DPS	DIFFERENTIAL PRESSURE SWITCH
DWG	DRAWING
(E)	EXISTING
EA	EXHAUST AIR
EAT	ENTERING AIR TEMPERATURE
EF	EXHAUST FAN
EG	ETHYLENE GLYCOL
ESP	EXTERNAL STATIC PRESSURE
EWT	ENTERING WATER TEMPERATURE
EXH	EXHAUST
EXIST	EXISTING
F	FIRE PROTECTION
FCO	FLOOR CLEANOUT
F.D.	FIRE DAMPER
FD	FLOOR DRAIN
FDC	FIRE DEPARTMENT CONNECTION
FF	FINISH FLOOR
FOR	FUEL OIL RETURN
FOS	FUEL OIL SUPPLY OR FUSIBLE OIL SAFETY
FSD	FIRE SMOKE DAMPER
FT	FLASH TANK OR FEET
FTR	FINNED TUBE RADIATION
G	LOW PRESSURE GAS
GAL	GALLONS
GPH	GALLONS PER HOUR
GPM	GALLONS PER MINUTE
HB	HOSE BIBB
HC	HEATING COIL
HL	HIGH LIMIT
HP	HORSEPOWER
HPR	HIGH PRESSURE CONDENSATE RETURN
HPS	HIGH PRESSURE STEAM
HR	HOUR
HTG	HEATING
HGR	HEATING GLYCOL RETURN
HGS	HEATING GLYCOL SUPPLY
HWC	HOT WATER CIRCULATION
HWR	HEATING WATER RETURN
HWS	HEATING WATER SUPPLY
HW	HOT WATER
HWC	HOT WATER CIRCULATION
HX	HEAT EXCHANGER
KH	KICKSPACE HEATER
LAT	LEAVING AIR TEMPERATURE
LF	LINEAL FOOT
LPR	LOW PRESSURE CONDENSATE RETURN
LPS	LOW PRESSURE STEAM
LWT	LEAVING WATER TEMPERATURE
MAV	MANUAL AIR VENT
MAX	MAXIMUM
MBH	THOUSANDS BTU PER HOUR
MFR	MANUFACTURER
MG	MEDICAL GAS
MIN	MINIMUM OR MINUTES
MPG	MEDIUM PRESSURE GAS
MPR	MEDIUM PRESSURE CONDENSATE RETURN
MPS	MEDIUM PRESSURE STEAM
MS	MOTOR STARTER
NC	NORMALLY CLOSED
N.I.C.	NOT IN CONTRACT
NO	NORMALLY OPEN
NPT	NATIONAL PIPE THREAD
NTS	NOT TO SCALE
O/	OVER
OA	OUTSIDE AIR
OW	OILY WASTE
O2	MEDICAL OXYGEN
PG	PROPYLENE GLYCOL
PH	PHASE
PLCS	PLACES
PRV	PRESSURE REGULATING VALVE
PSI	POUNDS PER SQUARE INCH
PSIG	POUNDS PER SQUARE INCH GAUGE
PT	PRESSURE/TEMPERATURE
RA	RETURN AIR
RCP	RADIANT CEILING PANEL
REQD	REQUIRED
RL	RAIN LEADER
RO	REVERSE OSMOSIS
R.O.	ROUGH OPENING
RPM	REVOLUTION PER MINUTE
SA	SUPPLY AIR
SD	SMOKE DETECTOR
SP	STATIC PRESSURE
SSTL	STAINLESS STEEL
T	TEMPERATURE
TAB	TEST, ADJUST & BALANCE
TB	TERMINAL BOX
TP	TRAP PRIMER
TSP	TOTAL STATIC PRESSURE
TYP	TYPICAL
UH	UNIT HEATER
US	UNDERSLAB
V	VENT OR VOLTS
VAC	VOLTAGE ALTERNATING CURRENT
VAV	VARIABLE AIR VOLUME
VTR	VENT THRU ROOF
W	WASTE
W/	WITH
WB	WET BULB
WC	WATER CLOSET
W.C.	WATER COLUMN
WCO	WALL CLEANOUT
WH	WATER HEATER
WHA	WATER HAMMER ARRESTOR

ALL SYMBOLS AND ABBREVIATIONS DO NOT NECESSARILY APPEAR ON DRAWINGS

Michael Baker INTERNATIONAL
3900 C Street, Suite 900
Anchorage, Alaska 99503
907.273.1600 www.mbakerintl.com
AECC105

COFFMAN ENGINEERS
800 F Street
Anchorage, Alaska 99501
907.276.6664 www.coffman.com
AECC249

STATE OF ALASKA 49TH
BRENT L LITTLE
Jan 11, 2019
No. ME12298
REGISTERED PROFESSIONAL ENGINEER
800 F. Street Anchorage, AK 99501 AECC249 907-276-6664
COFFMAN ENGINEERS

CITY OF VALDEZ, ALASKA
OPPORTUNITIES IN EVERY SEASON

VALDEZ ANIMAL SHELTER
KENNEL RENOVATION
VALDEZ, ALASKA

NO.	DATE	REVISION	BY	APVD

CLIENT PROJECT:	16-350-1606
CAD DWG FILE:	181839_M-001
DRAWN BY:	ISW
CHECKED BY:	BLL
PROJECT NUMBER:	181839
COPYRIGHT:	

SHEET TITLE
MECHANICAL LEGEND AND ABBREVIATIONS

M-001

SHEET 15 OF 25

IF SHEET IS LESS THAN 22"x34" IT IS A REDUCED PRINT - SCALE ACCORDINGLY

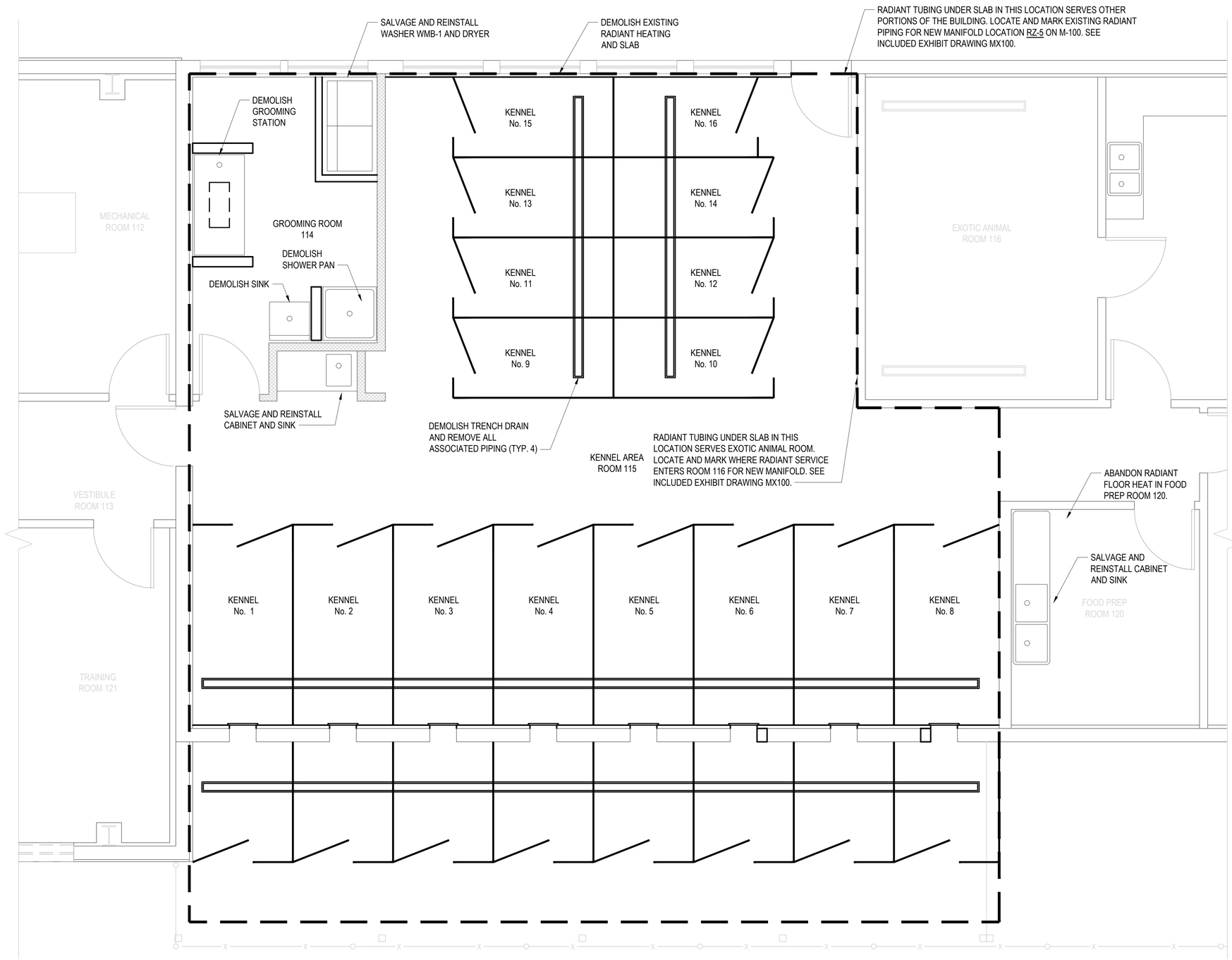

SHEET NOTES:

1. CONTRACTOR TO FIELD VERIFY ALL CONDITIONS.

D1 DEMOLITION PLAN
SCALE: 3/8" = 1'-0"

PLAN NORTH

3/8"=1'-0" 0 1 2 3 4 6 8

Michael Baker INTERNATIONAL
3900 C Street, Suite 900
Anchorage, Alaska 99503
907.273.1600 www.mbakerintl.com
AECC105
COFFMAN ENGINEERS
800 F Street
Anchorage, Alaska 99501
907.276.6664 www.coffman.com
AECC249

STATE OF ALASKA 49TH
BRENT L LITTLE
Jan 11, 2019
No. ME1298
REGISTERED PROFESSIONAL ENGINEER
800 F. Street
Anchorage, AK 99501
AECC249
907-276-6664
COFFMAN ENGINEERS

CITY OF VALDEZ, ALASKA
OPPORTUNITIES IN EVERY SEASON

VALDEZ ANIMAL SHELTER
KENNEL RENOVATION
VALDEZ, ALASKA

NO.	DATE	REVISION	BY	APVD

CLIENT PROJECT:	16-350-1606
CAD DWG FILE:	181839_MD100
DRAWN BY:	ISW
CHECKED BY:	BLL
PROJECT NUMBER:	181839
COPYRIGHT:	

SHEET TITLE
MECHANICAL
DEMOLITION PLAN

MD100

SHEET 16 OF 25

IF SHEET IS LESS THAN 22"x34" IT IS A REDUCED PRINT - SCALE ACCORDINGLY

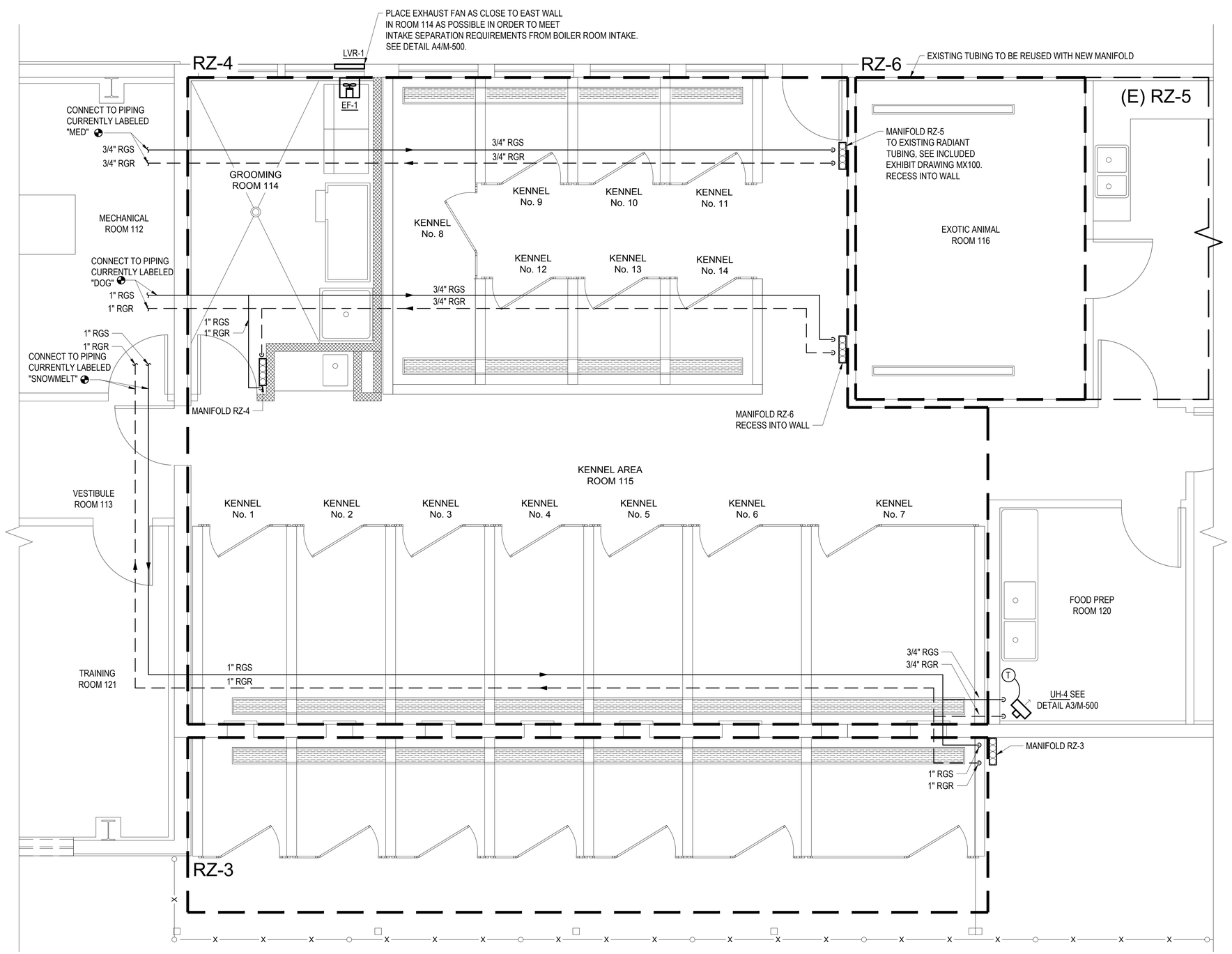

SHEET NOTES:

1. ALL PIPING ON THIS SHEET IS ABOVE GRADE.
2. (E) DOOR TO ROOM 114 IS UNDER CUT TO ALLOW FOR MAKEUP AIR TO EF-1.
3. SEE D1/M-501 FOR MECHANICAL ROOM HEATING DIAGRAM.

D1 KENNEL HEATING PLAN
SCALE: 3/8" = 1'-0"

PLAN NORTH

3/8"=1'-0" 0 1 2 3 4 6 8

Michael Baker INTERNATIONAL AECC105
3900 C Street, Suite 900
Anchorage, Alaska 99503
907.273.1600 www.mbakerintl.com

COFFMAN ENGINEERS AECC249
800 F Street
Anchorage, Alaska 99501
907.276.6664 www.coffman.com

STATE OF ALASKA 49TH
BRENT L LITTLE
Jan 11, 2019
No. ME12298
REGISTERED PROFESSIONAL ENGINEER
800 F. Street AECC249
Anchorage, AK 99501 907-276-6664
COFFMAN ENGINEERS

CITY OF VALDEZ, ALASKA
OPPORTUNITIES IN EVERY SEASON

VALDEZ ANIMAL SHELTER
KENNEL RENOVATION
VALDEZ, ALASKA

NO.	DATE	REVISION	BY	APVD

CLIENT PROJECT:	16-350-1606
CAD DWG FILE:	181839_M-100
DRAWN BY:	BLL
CHECKED BY:	ISW
PROJECT NUMBER:	181839
COPYRIGHT:	

SHEET TITLE
MECHANICAL
KENNEL HEATING PLAN

M-100

SHEET 17 OF 25

IF SHEET IS LESS THAN 22"x34" IT IS A REDUCED PRINT - SCALE ACCORDINGLY

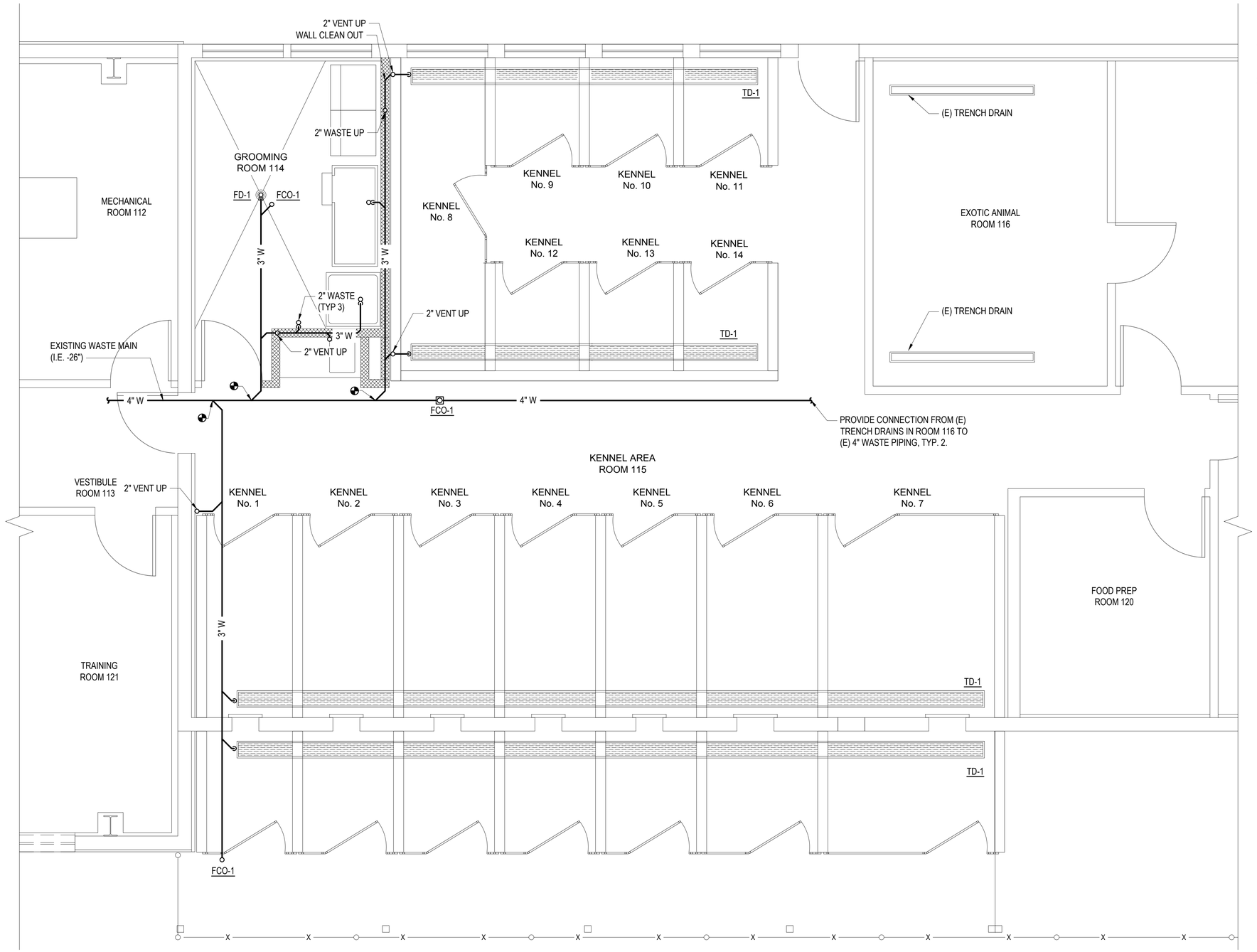

SHEET NOTES:

1. ALL VENTS TO BE COMBINED 3 FEET ABOVE FLOOD LEVEL AND ROUTED TO (E) VTR.
2. DEMOLISH RADIANT HEATING SLAB ON GRADE, RADIANT TUBING, INSULATION, AND ABANDONED-IN-PLACE SLAB UNDER INSULATION AS REQUIRED TO LOCATE EXISTING SEWER PIPE, WHICH IS UNDER THE ABANDONED-IN-PLACE SLAB. INVERT ELEVATION OF SEWER IS EXPECTED TO BE -26" DIRECTLY IN FRONT OF THE MECHANICAL ROOM BASED ON GROUND PENETRATING RADAR. FIELD VERIFY ACTUAL INVERT. SEE PLANS FOR INVERT LOCATION.

D1 KENNEL UNDERFLOOR PLUMBING PLAN
SCALE: 3/8" = 1'-0"

PLAN NORTH

3/8"=1'-0" 0 1 2 3 4 6 8

Michael Baker INTERNATIONAL
3900 C Street, Suite 900
Anchorage, Alaska 99503
907.273.1600 www.mbakerintl.com
AECC105

COFFMAN ENGINEERS
800 F Street
Anchorage, Alaska 99501
907.276.6664 www.coffman.com
AECC249

STATE OF ALASKA 49TH
BRENT L LITTLE
Jan 11, 2019
No. ME12298
REGISTERED PROFESSIONAL ENGINEER
800 F. Street
Anchorage, AK 99501
AECC249
907-276-6664
COFFMAN ENGINEERS

CITY OF VALDEZ, ALASKA
OPPORTUNITIES IN EVERY SEASON

VALDEZ ANIMAL SHELTER
KENNEL RENOVATION
VALDEZ, ALASKA

NO.	DATE	REVISION	BY	APVD

CLIENT PROJECT:	16-350-1606
CAD DWG FILE:	181839_M-110
DRAWN BY:	BLL
CHECKED BY:	ISW
PROJECT NUMBER:	181839
COPYRIGHT:	

SHEET TITLE
MECHANICAL
KENNEL UNDERFLOOR
PLUMBING PLAN

M-110

SHEET 18 OF 25

IF SHEET IS LESS THAN 22"x34" IT IS A REDUCED PRINT - SCALE ACCORDINGLY

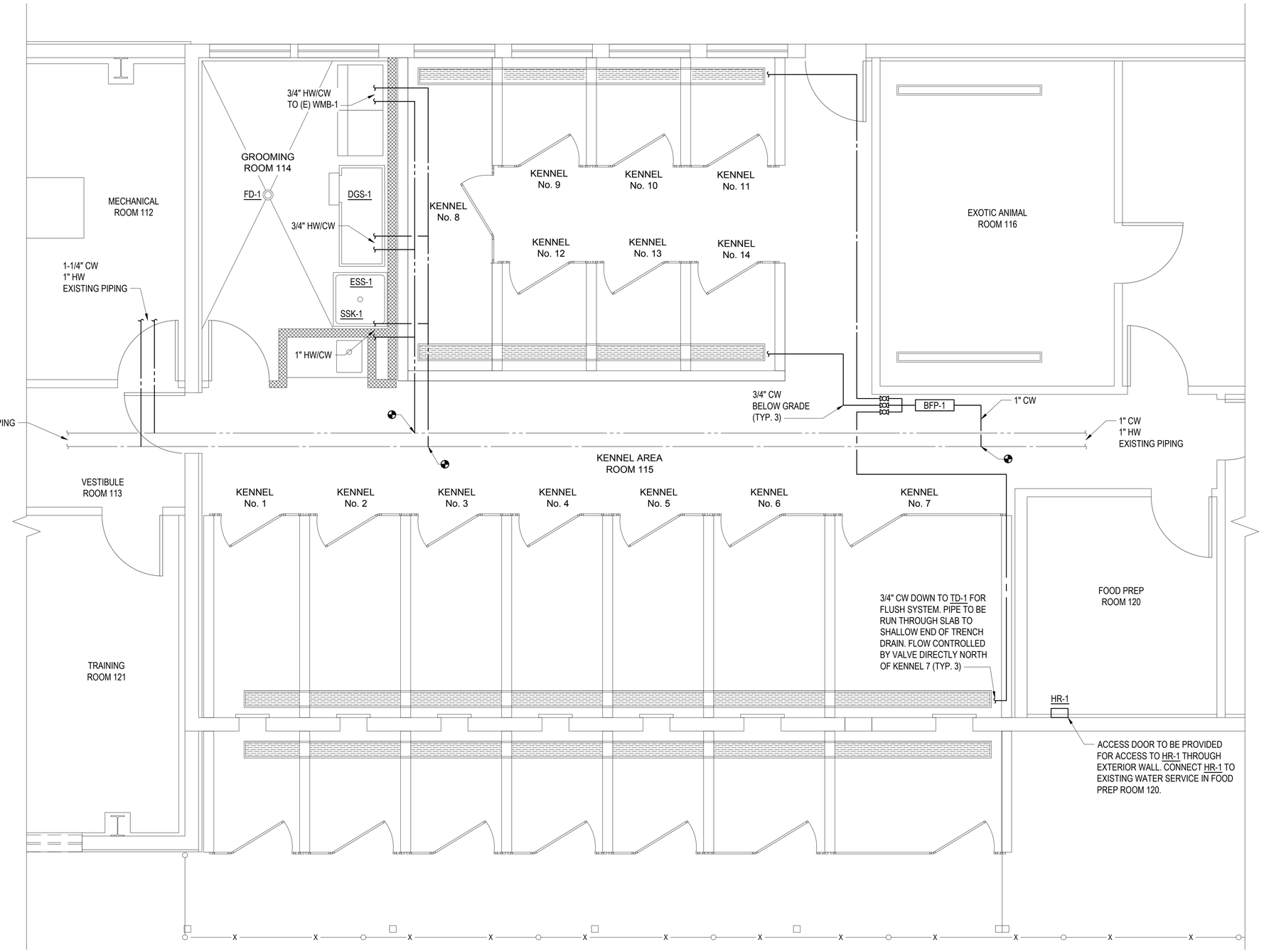

SHEET NOTES:

1. ROUTE PIPING EXPOSED BELOW CEILING AND COORDINATE WITH EXPOSED DUCTWORK AND STRUCTURAL MEMBERS.
2. CONNECT NEW VENTS TO (E) VTR.

D1 KENNEL ABOVEFLOOR PLUMBING PLAN
SCALE: 3/8" = 1'-0"

3/8"=1'-0" 0 1 2 3 4 6 8

Michael Baker INTERNATIONAL
3900 C Street, Suite 900
Anchorage, Alaska 99503
907.273.1600 www.mbakerintl.com
AECC105

COFFMAN ENGINEERS
800 F Street
Anchorage, Alaska 99501
907.276.6664 www.coffman.com
AECC249

STATE OF ALASKA 49TH
BRENT L LITTLE
Jan 11, 2019
No. ME12298
REGISTERED PROFESSIONAL ENGINEER
800 F. Street
Anchorage, AK 99501
AECC249
907-276-6664
COFFMAN ENGINEERS

CITY OF VALDEZ, ALASKA
OPPORTUNITIES IN EVERY SEASON

VALDEZ ANIMAL SHELTER
KENNEL RENOVATION
VALDEZ, ALASKA

NO.	DATE	REVISION	BY	APVD

CLIENT PROJECT:	16-350-1606
CAD DWG FILE:	181839_M-111
DRAWN BY:	BLL
CHECKED BY:	ISW
PROJECT NUMBER:	181839
COPYRIGHT:	

SHEET TITLE
MECHANICAL
KENNEL ABOVEFLOOR
PLUMBING PLAN

M-111

SHEET 19 OF 25

IF SHEET IS LESS THAN 22"x34" IT IS A REDUCED PRINT - SCALE ACCORDINGLY

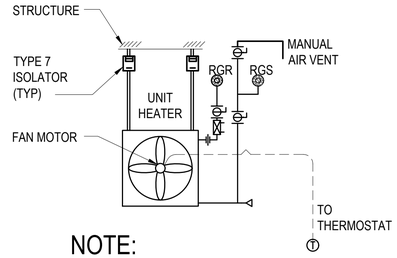

NOTE:
HOOK UP COIL WITH FLEX HOSE.

A3 UNIT HEATER DETAIL
SCALE: NTS

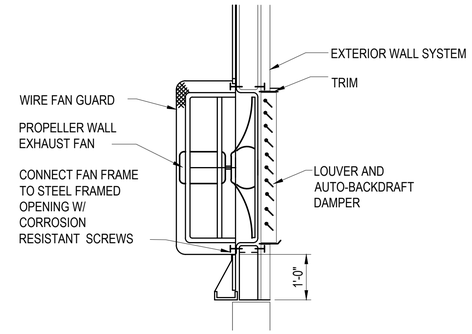

A4 SIDEWALL EXHAUST DETAIL
SCALE: NTS

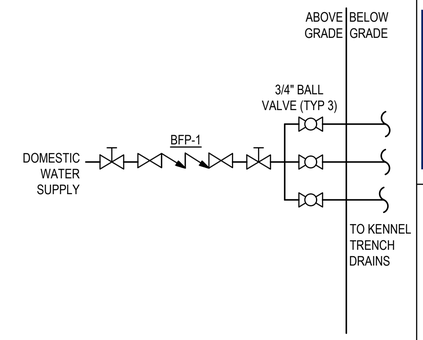

A6 KENNEL FLUSH VALVES
SCALE: NTS

Michael Baker INTERNATIONAL AECC105
3900 C Street, Suite 900
Anchorage, Alaska 99503
907.273.1600 www.mbakerintl.com

COFFMAN ENGINEERS AECC249
800 F Street
Anchorage, Alaska 99501
907.276.6664 www.coffman.com

STATE OF ALASKA 49TH
BRENT L LITTLE
Jan 11, 2019
No. ME12298
REGISTERED PROFESSIONAL ENGINEER
800 F. Street AECC249
Anchorage, AK 99501 907-276-6664
COFFMAN ENGINEERS

CITY OF VALDEZ, ALASKA
OPPORTUNITIES IN EVERY SEASON

VALDEZ ANIMAL SHELTER
KENNEL RENOVATION
VALDEZ, ALASKA

NO.	DATE	REVISION	BY	APVD

CLIENT PROJECT:	16-350-1606
CAD DWG FILE:	181839_M-500
DRAWN BY:	BLL
CHECKED BY:	ISW
PROJECT NUMBER:	181839
COPYRIGHT:	

SHEET TITLE
MECHANICAL
DETAILS

M-500

SHEET 20 OF 25

IF SHEET IS LESS THAN 22"x34" IT IS A REDUCED PRINT - SCALE ACCORDINGLY

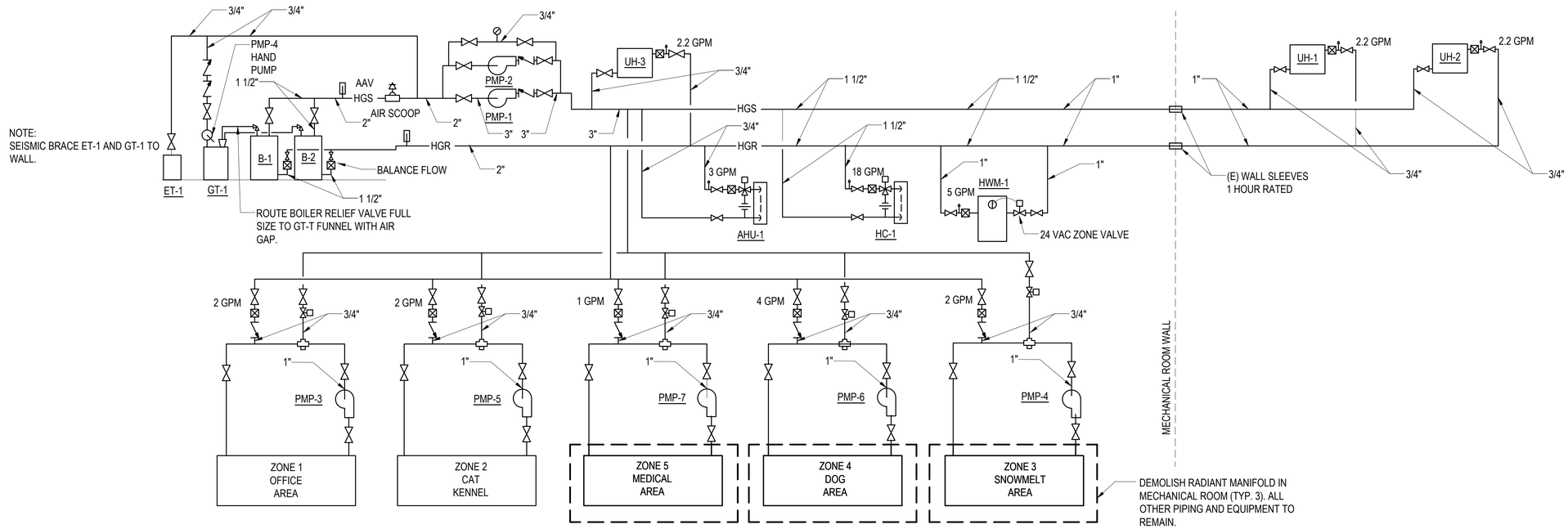

B1 DEMO HEATING DIAGRAM
SCALE: NTS

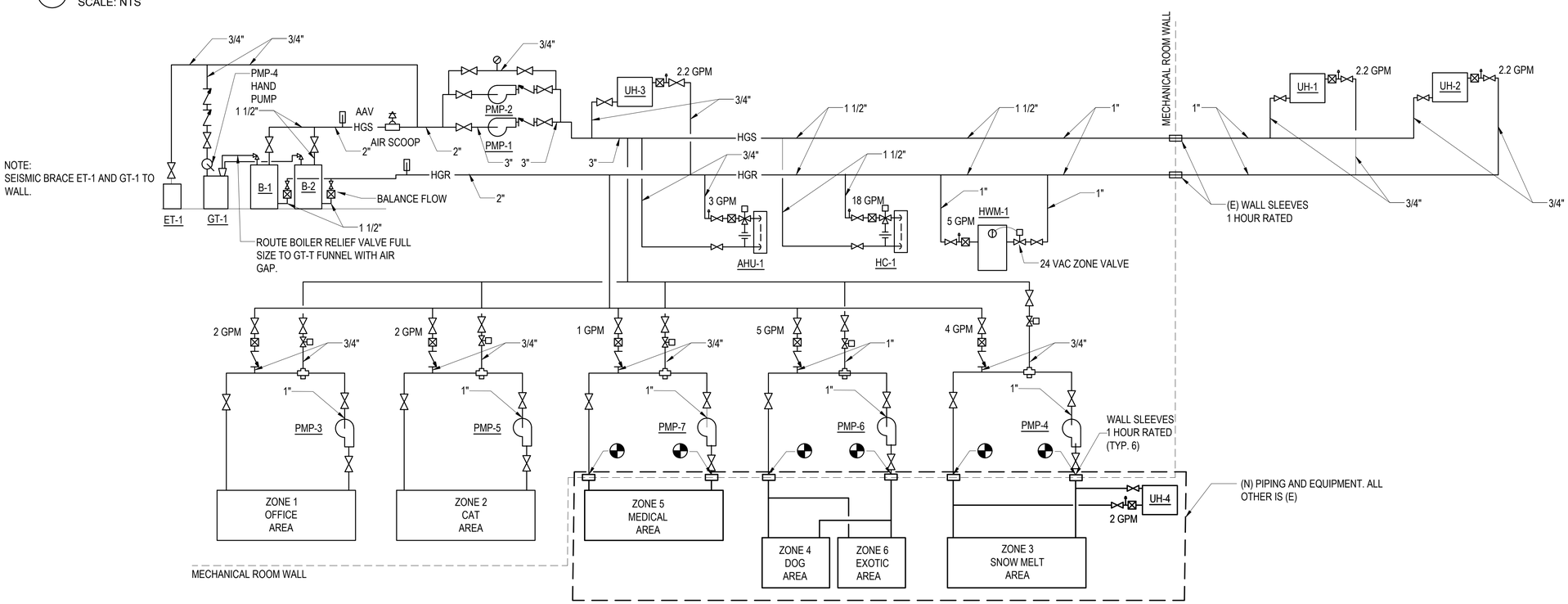

D1 NEW HEATING DIAGRAM
SCALE: NTS

Michael Baker INTERNATIONAL AECC105
3900 C Street, Suite 900
Anchorage, Alaska 99503
907.273.1600 www.mbakerintl.com

COFFMAN ENGINEERS AECC249
800 F Street
Anchorage, Alaska 99501
907.276.6664 www.coffman.com

STATE OF ALASKA 49TH
BRENT L LITTLE
Jan 11, 2019
No. ME12298
REGISTERED PROFESSIONAL ENGINEER
800 F. Street AECC249
Anchorage, AK 99501 907-276-6664
COFFMAN ENGINEERS

CITY OF VALDEZ, ALASKA
OPPORTUNITIES IN EVERY SEASON

VALDEZ ANIMAL SHELTER
KENNEL RENOVATION
VALDEZ, ALASKA

NO.	DATE	REVISION	BY	APVD

CLIENT PROJECT:	16-350-1606
CAD DWG FILE:	181839_M-501
DRAWN BY:	ISW
CHECKED BY:	BLL
PROJECT NUMBER:	181839
COPYRIGHT:	

SHEET TITLE
MECHANICAL
DIAGRAMS

M-501

SHEET 21 OF 25

IF SHEET IS LESS THAN 22"x34" IT IS A REDUCED PRINT - SCALE ACCORDINGLY

UNIT HEATER SCHEDULE

TAG	TYPE	LOCATION	RATED CAPACITY (MBH)	FLUID %/TYPE	EGT (F)	LGT (F)	FLOW (GPM)	EAT (F)	FAN				BASIS OF DESIGN		NOTES
									VOLTS	PHASE	HP OR W	CFM	MFR.	MODEL	
UH-4	HORIZONTAL	FOOD PREP 120	7.4	50 / PG	120	100	1.9	55	120	1	16W	420	STERLING	HS-118A	1

NOTES

1. RATED CAPACITY BASED ON 20°F DELTA, 120 DEG F EGT AND 50% PROPYLENE GLYCOL SOLUTION. CORRECTION FACTOR OF 0.47.

RADIANT HEAT ZONE SCHEDULE

ZONE	AREA (SF)	OUTPUT BTU/Sq. Ft	TEMPERATURE		# OF CIRCUITS	SPACING O.C. (IN.)	TUBE DIAMETER (IN.)	FLOW (GPM)	PRESSURE DROP MAX. (FT)	BASIS OF DESIGN		NOTES
			SUPPLY (DEGREE F)	DELTA T (DEGREE F)						MFR	MODEL	
RZ-3	239	30	120	20	–	10	3/4	1.0	15	ZURN	–	1,3
RZ-4	1,202	30	120	20	–	10	3/4	4.0	15	ZURN	–	1,3
RZ-5	500	–	120	20	–	–	–	–	–	ZURN	–	1,2
RZ-6	188	–	120	20	–	–	–	–	–	ZURN	–	1,2

NOTES:

1. PROVIDE 6 IN. O.C. LAYOUT FOR 3 FT. ALONG EXTERIOR WALLS OF ZONE SERVED.
2. EXISTING.
3. NUMBER OF CIRCUITS AND MODEL TO BE DETERMINED BY RADIANT SUPPLIER

FAN SCHEDULE

TAG	LOCATION	SERVES	CFM	ESP (IN. W.C.)	DRIVE	MOTOR				BASIS OF DESIGN		NOTES
						FAN RPM	MOTOR HP OR W	VOLTS	PHASE	MFR.	MODEL	
EF-1	GROOMING 114	GROOMING 114	185	0.375	DIRECT	1717	1/6 HP	120	1	COOK	90SQN17DEC	1

NOTES:

1. PROVIDE WITH WALL MOUNTED, OPERATOR CONTROLLED ON/OFF SWITCH ADJACENT TO ROOM LIGHT SWITCH.

LOUVER SCHEDULE

TAG	LOCATION	SERVES	MANUFACTURER /MODEL	AIR FLOW (CFM)	VELOCITY (FPM)	SIZE (IN)	FREE AREA (SQ.FT.)	SP LOSS (IN WC)	DRAINABLE (Y/N)	BLADE ANGLE	FRAME DEPTH	NOTES
LVR-1	GROOMING 114	EF-1	RUSKIN ELF6375DX	150	485	12"Wx12"H	0.3	0.10	Y	37.5	6"	1

NOTES:

1. PROVIDE WITH 1"X1" BIRD SCREEN.

PLUMBING FIXTURES SCHEDULE

TAG	ITEM	CONNECTIONS				BASIS OF DESIGN		REMARKS
		WASTE	VENT	C.W.	H.W.	MANUFACTURER	MODEL	
FIXTURES								
ESS-1	EMERGENCY SAFETY STATION	–	–	–	1-1/4"	GUARDIAN	G1931	EMERGENCY SAFETY SHOWER AND EYEWASH COMBINATION UNIT. INSTALLED WITH A TV-1 VALVE. MEETS ANSI Z358.1-2009 REQUIREMENTS.
DGS-1	DOG GROOMING STATION	–	–	–	–	HANVEY	60"x27"	–
HR-1	HOSE REEL	–	–	1"	–	HANNAY	1800	MANUAL HOSE REEL, CAM-LOCK DRAG BREAK. 1" FEMALE NPT INLET WITH ISOLATION VALVE, 3/4" FEMALE NPT OUTLELT.
BFP-1	BACKFLOW PREVENTER	–	–	1"	–	WATTS	007	BACKFLOW PREVENTER RATED FOR DOMESTIC WATER PROTECTION FOR NON-POTABLE APPLICATIONS. HORIZONTAL MOUNTING ONLY.
TV-1	TEMPERING VALVE	–	–	1"	1"	GUARDIAN	G3802	THERMOSTATIC MIXING VALVE, RATED FOR DOMESTIC WATER, SUPPLY OUTLET 80 DEG F, ADJUSTABLE. STAINLESS STEEL SURFACE MOUNT ENCLOSURE
DRAINAGE								
TD-1	TRENCH DRAIN	4"	2"	–	–	ZURN	Z882	HDPE TRENCH CONSTRUCTION WITH 12" WIDE REVEAL. SELECT WITH FABRICATED 316 STAINLESS STEEL (FS) SLOTTED GRATE – CLASS A.
FD-1	FLOOR DRAIN	2"	2"	–	–	ZURN	Z415B	FLOOR DRAIN, CAST IRON BODY WITH POLISHED NICKEL BRONZE STRAINER.
SSK-1	SERVICE SINK	2"	2"	–	–	FIAT	ADATN-3636	TERRAZZO SHOWER RECEPTOR. FULLY GROUTED BASE, STAINLESS STEEL DRAIN.
FCO-1	FLOOR CLEANOUT	2"	–	–	–	ZURN	Z1400-HD	FINISHED FLOOR. CAST IRON BODY.

Michael Baker INTERNATIONAL
3900 C Street, Suite 900
Anchorage, Alaska 99503
907.273.1600 www.mbakerintl.com
AECC105

COFFMAN ENGINEERS
800 F Street
Anchorage, Alaska 99501
907.276.6664 www.coffman.com
AECC249

STATE OF ALASKA 49TH
BRENT L LITTLE
Jan 11, 2019
No. ME12298
REGISTERED PROFESSIONAL ENGINEER
800 F. Street AECC249
Anchorage, AK 99501 907-276-6664
COFFMAN ENGINEERS

CITY OF VALDEZ, ALASKA
OPPORTUNITIES IN EVERY SEASON

VALDEZ ANIMAL SHELTER
KENNEL RENOVATION
VALDEZ, ALASKA

NO.	DATE	REVISION	BY	APVD

CLIENT PROJECT:	16-350-1606
CAD DWG FILE:	181839_M-600
DRAWN BY:	BLL
CHECKED BY:	ISW
PROJECT NUMBER:	181839
COPYRIGHT:	

SHEET TITLE
MECHANICAL SCHEDULES

M-600

SHEET 22 OF 25

IF SHEET IS LESS THAN 22"x34" IT IS A REDUCED PRINT - SCALE ACCORDINGLY

GENERAL NOTES

1. THE HYDRONIC TUBING LAYOUT IN THIS AS-BUILT PLAN IS APPROXIMATE. THIS LAYOUT IS INTENDED FOR PLANNING USE ONLY. PRECISE FIELD LOCATION OF TUBING WITH INFRARED SURVEY IS REQUIRED PRIOR TO CONCRETE CUTTING.

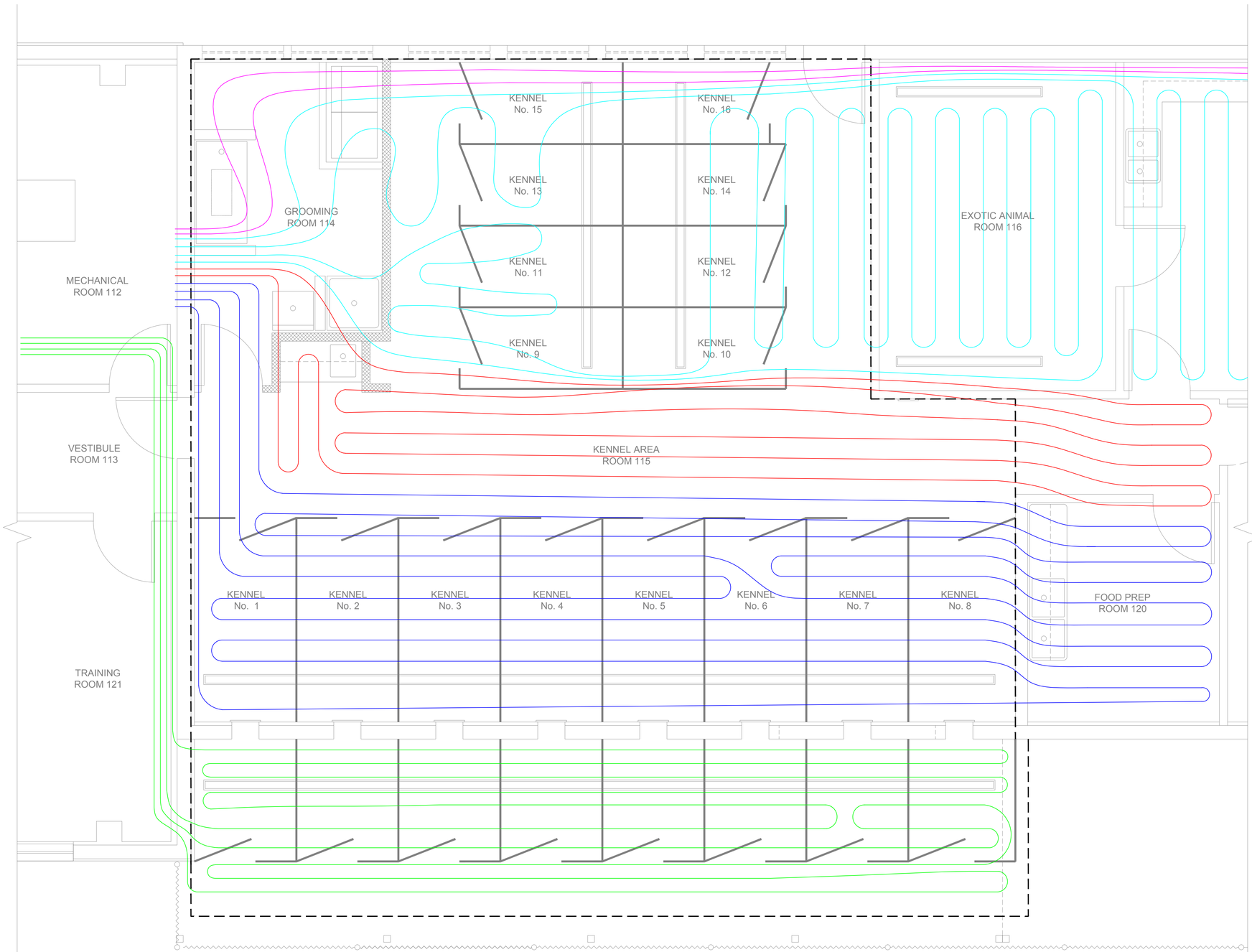

EXHIBIT DRAWING ONLY

1 EXISTING RADIANT TUBING
3/8" = 1'-0"

0 2' 4' 6'

PLAN NORTH

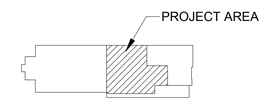

KEY PLAN
NOT TO SCALE

Michael Baker INTERNATIONAL
3900 C Street, Suite 900 AECC103
Anchorage, Alaska 99503
907.273.1600 www.mbakerintl.com

COFFMAN ENGINEERS AECC249
800 E Street
Anchorage, Alaska 99501
907.276.6664 www.coffman.com

CITY OF VALDEZ, ALASKA
OPPORTUNITIES IN EVERY SEASON

VALDEZ ANIMAL SHELTER
KENNEL RENOVATION
VALDEZ, ALASKA

NO.	DATE	REVISION	BY	APVD

CLIENT PROJECT:	16-350-1606
CAD DWG FILE:	MX100.DWG
DRAWN BY:	J. MONROY
CHECKED BY:	P. LANGLEY
PROJECT NUMBER:	167167

COPYRIGHT:
MICHAEL BAKER INTERNATIONAL

SHEET TITLE
ARCHITECTURAL
EXISTING
RADIANT TUBING
EXHIBIT

MX100

IF SHEET IS LESS THAN 22"x34" IT IS A REDUCED PRINT - SCALE ACCORDINGLY

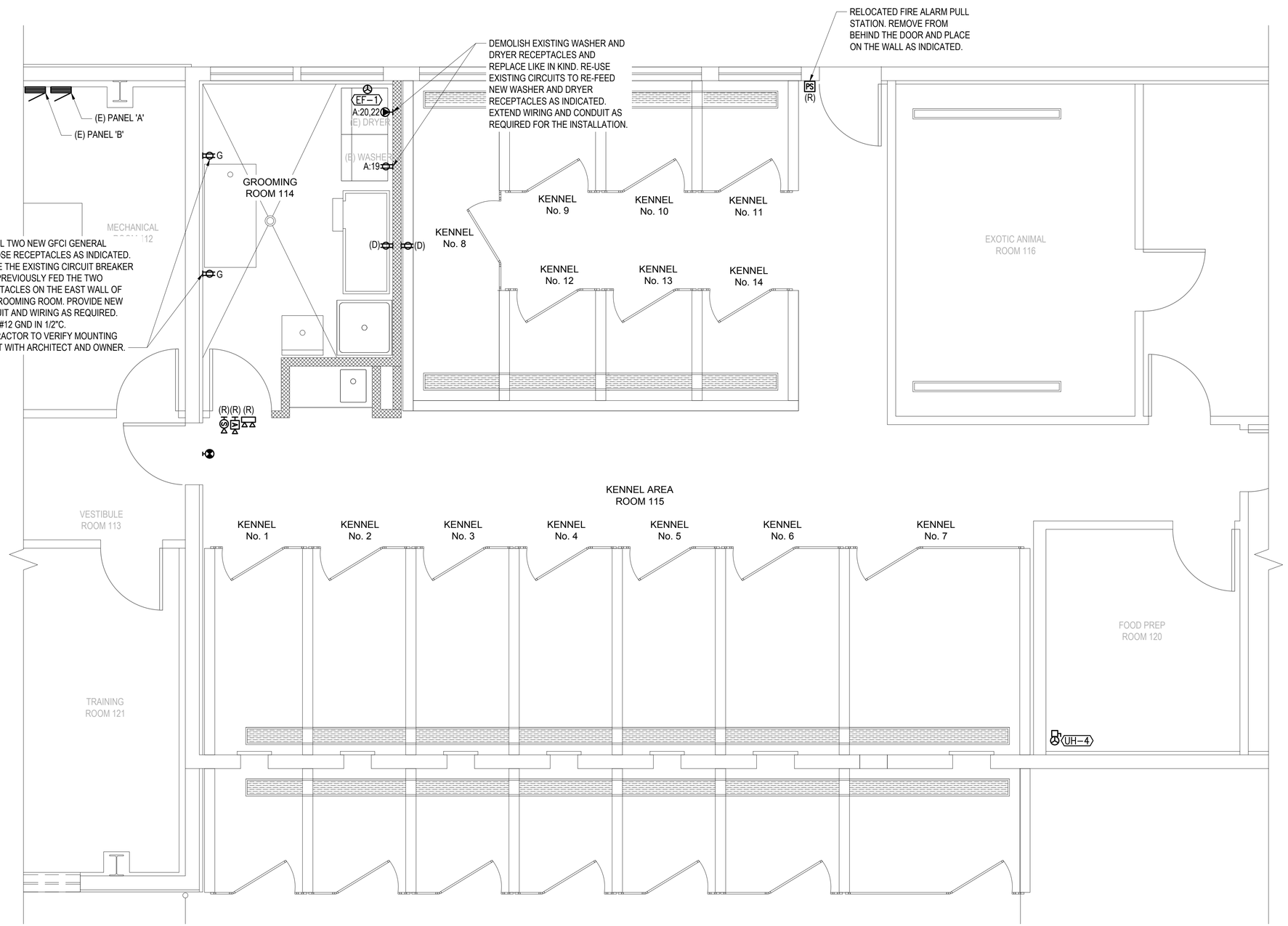

1 KENNEL PLAN
SCALE: 3/8" = 1'-0"

PLAN NORTH

EQUIPMENT CONNECTION SCHEDULE

TAG	DESCRIPTION	LOCATION	VOLTS/PH	CONT.	LOAD	PANEL	CKT	BREAKER	FEEDER
EF-1	EXHAUST FAN	GROOMING RM 114	120/1	SW	1/6 HP	B	36	20A/1P	1/2"C, 2#12, 1#12 GND
UH-4	UNIT HEATER	FOOD PREP RM 120	120/1	D	16W	B	38	20A/1P	1/2"C, 2#12, 1#12 GND

CONTROLLER LEGEND: D = DISCONNECT, C = COMBINATION MOTOR STARTER/DISCONNECT, SW = SWITCH, INT = INTEGRAL

LEGEND:

- DUPLEX RECEPTACLE
  G - GROUND FAULT CIRCUIT INTERRUPTER
- SPECIAL PURPOSE RECEPTACLE
- X:X CIRCUIT IDENTIFIER (PANEL:CIRCUIT NUMBER)
- XXX MECHANICAL EQUIPMENT TAG - REFER TO EQUIPMENT CONNECTION SCHEDULE ON THIS SHEET.
- SURFACE MOUNT ELECTRICAL PANEL - REFER TO PANEL SCHEDULES ON E-600
- EQUIPMENT CONNECTION
- FIRE ALARM HORN/STROBE
- WALL-MOUNTED SPEAKER
- EMERGENCY LIGHT
- PS FIRE ALARM PULL STATION
- EXIT SIGN
- (E) EXISTING
- (D) DEMOLISH
- (R) REMOVE & RE-INSTALL

SHEET NOTES:

1. THE ELECTRICAL INSTALLATION SHALL COMPLY WITH THE CURRENT NATIONAL ELECTRICAL CODE, STATE AND LOCAL AMENDMENTS, AND NECA STANDARDS OF INSTALLATION.
2. ALL ELECTRICAL EQUIPMENT AND MATERIALS SHALL BE LISTED AND LABELED FOR THEIR INTENDED APPLICATION BY A NATIONALLY RECOGNIZED TESTING LABORATORY ACCEPTABLE TO THE AUTHORITY HAVING JURISDICTION.
3. EXISTING EQUIPMENT INFORMATION SHOWN ON THESE DRAWINGS SHOULD BE FIELD VERIFIED. CONFIRM NEW EQUIPMENT LOCATIONS WITH OWNER AND ADJUST AS REQUIRED.
4. CONTRACTOR SHALL DISPOSE OF ALL DEMOLISHED AND UNUSED EQUIPMENT AND MATERIALS OFFSITE IN ACCORDANCE WITH LOCAL, STATE, AND FEDERAL REGULATIONS.
5. CONTRACTOR SHALL MAINTAIN A RED-LINE SET OF CONSTRUCTION DOCUMENTS DURING CONSTRUCTION. RED-LINE DRAWINGS SHALL BE SUBMITTED TO THE OWNER UPON PROJECT COMPLETION.
6. ALL WIRING WIRING MAY BE THHW/THHN UNLESS NOTED OTHERWISE.
7. THE CONTRACTOR SHALL PROVIDE AND INSTALL AN EQUIPMENT GROUNDING CONDUCTOR IN ALL CONDUITS OR CABLING
8. ALL CONDUIT AND CABLE SHALL BE INSTALLED ORTHOGONAL TO THE STRUCTURE.
9. PROVIDE TYPED, UPDATED PANEL SCHEDULES FOR PANELS MODIFIED BY THIS PROJECT.
10. DRAWINGS ARE SCHEMATIC ONLY AND DO NOT SHOW ALL CONDUIT AND CONNECTIONS BETWEEN RESPECTIVE DEVICES AND FIXTURES. CONTRACTOR SHALL DETERMINE THE EXACT ROUTING OF CONDUIT, CABLE, AND WIRING CONNECTIONS BETWEEN RESPECTIVE DEVICES AND FIXTURES FOR A COMPLETE AND OPERATIONAL SYSTEM.

LOAD STATEMENT:

THE EXISTING BUILDING SERVICE IS A 208/120V, 225A, 3 PHASE, 4-WIRE SERVICE THAT FEEDS TWO 208/120V, 225A DISTRIBUTION PANELS. THE TOTAL CONNECTED LOAD ON BOTH PANELS EQUALS 205A.

NEW LOADS INCLUDE A $\frac{1}{6}$ HP EXHAUST FAN AND A 16W UNIT HEATER. THIS WILL ADD 5A TO THE BUILDING RESULTING IN A TOTAL CONNECTED LOAD OF 210A.

THE EXISTING 225A SERVICE IS ADEQUATE FOR THIS INSTALLATION.

3/8"=1'-0" 0 1 2 3 4 6 8

Michael Baker INTERNATIONAL
3900 C Street, Suite 900
Anchorage, Alaska 99503
907.273.1600 www.mbakerintl.com
AECC105
COFFMAN ENGINEERS AECC249
800 F Street
Anchorage, Alaska 99501
907.276.6664 www.coffman.com

STATE OF ALASKA 49TH LOGAN R. HAINES Jan 11, 2019 No. EE12048 REGISTERED PROFESSIONAL ENGINEER
800 F. Street Anchorage, AK 99501 AECC249 907-276-6664
COFFMAN ENGINEERS

CITY OF VALDEZ, ALASKA · OPPORTUNITIES IN EVERY SEASON ·

VALDEZ ANIMAL SHELTER
KENNEL RENOVATION
VALDEZ, ALASKA

NO.	DATE	REVISION	BY	APVD

CLIENT PROJECT:	16-350-1606
CAD DWG FILE:	181839_E-100
DRAWN BY:	DMN
CHECKED BY:	LRH
PROJECT NUMBER:	181839
COPYRIGHT:	

SHEET TITLE
ELECTRICAL
KENNEL PLAN

E-100

SHEET 24 OF 25

IF SHEET IS LESS THAN 22"x34" IT IS A REDUCED PRINT - SCALE ACCORDINGLY

PANEL	PANEL 'A'	208/120V 3 PHASE, 4 WIRE	MOUNTING: SURFACE
LOCATION	MECHANICAL ROOM	225 AMP BUS MAIN LUGS ONLY	GRND BUS: EQUIPMENT
SPECIAL			SHORT CKT: 10 kAIC SCCR

CT	NOTES	CIRCUIT DESCRIPTION	LOAD (AMPS) A	B	C	BKR TRIP	POLES	WIRE SIZE	CKT NO	BUS	CKT NO	WIRE SIZE	POLES	BKR TRIP	LOAD (AMPS) A	B	C	CIRCUIT DESCRIPTION	NOTES	CT
2		OUTSIDE RECEPTACLES	5			20	1	12	1	A	2	12	1	20	3			AFTER HOURS DROP, ENTRY		2
2		LOBBY DESK		5		20	1	12	3	B	4	12	1	20		8		LOBBY		2
2		FVAS CLOSET, MAIN HALL			6	20	1	12	5	C	6	12	1	20			6	BREAK ROOM 'A'		2
2		CAT HOLDING, JANITOR CLOSET	5			20	1	12	7	A	8	12	1	20	8			BREAK ROOM 'B'		2
2		BREAK ROOM 'C'		5		20	1	12	9	B	10	12	1	20		3		RESTROOM, MECH RM. RECEPTACLES		2
3		TELEPHONE BKBOARD (ABANDONED?)			3	20	1	12	11	C	12	12	1	20			9	WOLF DEN		2
2		PUPPY PALACE	6			20	1	12	13	A	14	12	1	20	6			CAT PREP 'A'		2
2		CAT PREP 'B'		8		20	1	12	15	B	16	12	1	20		9		ACI OFFICE		2
2		CAT KENNELS			9	20	1	12	17	C	18	12	1	20			11	CATTERY MAIN, CAT PREP 'C'		2
4	1	WASHER	10			20	1	12	19	A	20	10	2	30	24			DRYER	1	4
2		QUARANTINE RM, EDUCATION RM 'A'		8		20	1	12	21	B	22					24		" "		
2		ED ROOM GFI			6	20	2	12	23	C	24	12	1	20			9	GROOMING ROOM, DOG KENNEL		2
		" "	6						25	A	26	12	1	20	8			EDUCATION RM 'B'		2
		SPACE							27	B	28							SPACE		
2		INCINERATOR RM, GARAGE 'A'			3	20	1	12	29	C	30	12	1	20			8	EDUCATION RM 'C'		2
2		DOG PREP 'A'	5			20	1	12	31	A	32	12	1	20	5			GARAGE 'B'		2
3		DOG PREP DISHWASHER RECEPT		12		20	1	12	33	B	34	12	1	20		3		DOG PREP 'B'		2
2		DOG PREP 'C'			8	20	1	12	35	C	36	12	1	20			10	GARAGE DOOR OPENER		4
4		INCINERATOR	23			30	3	10	37	A	38	12	1	20				SPARE		
		" "		23					39	B	40	12	2	20		6		ED ROOM REC		2
		" "			23				41	C	42						6	" "		
		TOTAL	58	59	58										54	52	58	TOTAL		

TOTAL CONNECTED AMPS: A: 112 B: 112 C: 116

	CATEGORY (CT)	CONNECTED LOAD (KVA) THIS PNL	FED THRU	TOTAL	NEC DEMAND FACTOR	NEC DEMAND LOAD (KVA)
1	LIGHTING				100%	
2	RECEPTACLES	22		22	50% OVER 10 KVA	16
3	EQUIPMENT (CONTINUOUS)	2		2	100%	2
4	EQUIPMENT (NON-CONTINUOUS)	16		16	100%	16
5	MOTORS No Motors				100%	
6	NO DIVERSITY				100%	
7	NOT USED				100%	
	TOTAL KVA	40		40		34
	NEC 215.2 MINIMUM FEEDER RATING:					94

NOTES:
1. RECONNECT EXISTING CONDUCTORS

PANEL	PANEL 'B'	208/120V 3 PHASE, 4 WIRE	MOUNTING: SURFACE
LOCATION	MECHANICAL ROOM	225 AMP BUS MAIN LUGS ONLY	GRND BUS: EQUIPMENT
SPECIAL			SHORT CKT: 22 kAIC SCCR

CT	NOTES	CIRCUIT DESCRIPTION	LOAD (AMPS) A	B	C	BKR TRIP	POLES	WIRE SIZE	CKT NO	BUS	CKT NO	WIRE SIZE	POLES	BKR TRIP	LOAD (AMPS) A	B	C	CIRCUIT DESCRIPTION	NOTES	CT
1		CATTERY	11			20	1	12	1	A	2	12	1	20	11			CAT PREP, PUPPY PALACE, WOLF DEN		1
1		ACI, CAT HOLDING, BREAK RM, MECH		13		20	1	12	3	B	4	12	1	20		12		ENTRY, LOBBY, MAIN HALL		1
1		GROOM RM, DOG KENNEL 'A'			16	20	1	12	5	C	6	12	1	20			9	DOG KENNEL 'B'		1
1		KENNEL EXTERIOR LIGHTS	10			20	1	12	7	A	8	12	1	20	9			INCINERATOR RM, GARAGE		1
3		UNIT HEATER 1 (GARAGE)		2		20	1	12	9	B	10	12	1	20		12		EDUCATION RM		1
1		QUARANTINE RM, DOG PREP			7	20	1	12	11	C	12	12	1	20			10	CIRCULATING FAN		3
3		CIRCULATING PUMP #2	7			20	3	12	13	A	14	12	3	20	2			EXHAUST FAN 1		3
		" "		7					15	B	16					2		" "		
		" "			7				17	C	18						2	" "		
3		FIRE ALARM CONTROL PANEL	2			20	1	12	19	A	20	12	3	20	3			SUPPLY FAN 1		3
3		UNIT HEATER 2 (INCINERATOR RM)		2		20	1	12	21	B	22					3		" "		
3		CIRCULATING PUMP #1			7	20	3	12	23	C	24						3	" "		
		" "	7						25	A	26	12	1	20	1			LIGHTING CONTACTOR		1
		" "		7					27	B	28	12	1	20		5		DEC PANEL		3
		SPARE				20	1	12	29	C	30	12	1	20			2	MECHANICAL RM RECEPTACLE		2
3		CIRCULATING PUMPS #3-7	16			20	1	12	31	A	32	12	1	20	10			EXTERIOR LIGHTING FRONT		1
3		BOILER #1 & #2		12		20	1	12	33	B	34	12	1	20		10		EXTERIOR LIGHTING REAR		1
3		AIR HANDLING UNIT			7	20	1	12	35	C	36	12	1	20			4	EXHAUST FAN EF-1	1	3
		SPACE							37	A	38	12	1	20	1			UNIT HEATER UH-4	1	3
		SPACE							39	B	40							SPACE		
		SPACE							41	C	42							SPACE		
		TOTAL	53	43	44										38	45	31	TOTAL		

TOTAL CONNECTED AMPS: A: 91 B: 88 C: 75

	CATEGORY (CT)	CONNECTED LOAD (KVA) THIS PNL	FED THRU	TOTAL	NEC DEMAND FACTOR	NEC DEMAND LOAD (KVA)
1	LIGHTING	16		16	100%	16
2	RECEPTACLES	0		0	50% OVER 10 KVA	0
3	EQUIPMENT (CONTINUOUS)	15		15	100%	15
4	EQUIPMENT (NON-CONTINUOUS)				100%	
5	MOTORS Largest Motor 2 HP				100%	1
6	NO DIVERSITY				100%	
7	NOT USED				100%	
	TOTAL KVA	30		30		31
	NEC 215.2 MINIMUM FEEDER RATING:					107

NOTES:
1. NEW LOAD, NEW CIRCUIT BREAKER

Michael Baker INTERNATIONAL
3900 C Street, Suite 900
Anchorage, Alaska 99503
907.273.1600 www.mbakerintl.com
AECC105

COFFMAN ENGINEERS
800 F Street
Anchorage, Alaska 99501
907.276.6664 www.coffman.com
AECC249

STATE OF ALASKA 49TH LOGAN R. HAINES Jan 11, 2019 No. EE12048 REGISTERED PROFESSIONAL ENGINEER
800 F. Street Anchorage, AK 99501 AECC249 907-276-6664
COFFMAN ENGINEERS

CITY OF VALDEZ, ALASKA — OPPORTUNITIES IN EVERY SEASON

VALDEZ ANIMAL SHELTER
KENNEL RENOVATION
VALDEZ, ALASKA

NO.	DATE	REVISION	BY	APVD

CLIENT PROJECT:	16-350-1606
CAD DWG FILE:	181839_E-600
DRAWN BY:	DMN
CHECKED BY:	LRH
PROJECT NUMBER:	181839
COPYRIGHT:	

SHEET TITLE
ELECTRICAL
PANEL SCHEDULES

E-600

SHEET 25 OF 25

IF SHEET IS LESS THAN 22"x34" IT IS A REDUCED PRINT - SCALE ACCORDINGLY